BAYLINER®

185, 195, 205, & 225 Runabouts

Owner's Manual *Supplement*

Engine Serial Number: _____

Hull Identification Number:_____

Hull Identification Number

- The Hull Identification Number (HIN) is located on the starboard side of the transom.
- Record the HIN (and the engine serial numbers) in the space provided above.
- Please refer to the HIN for any correspondence or orders.

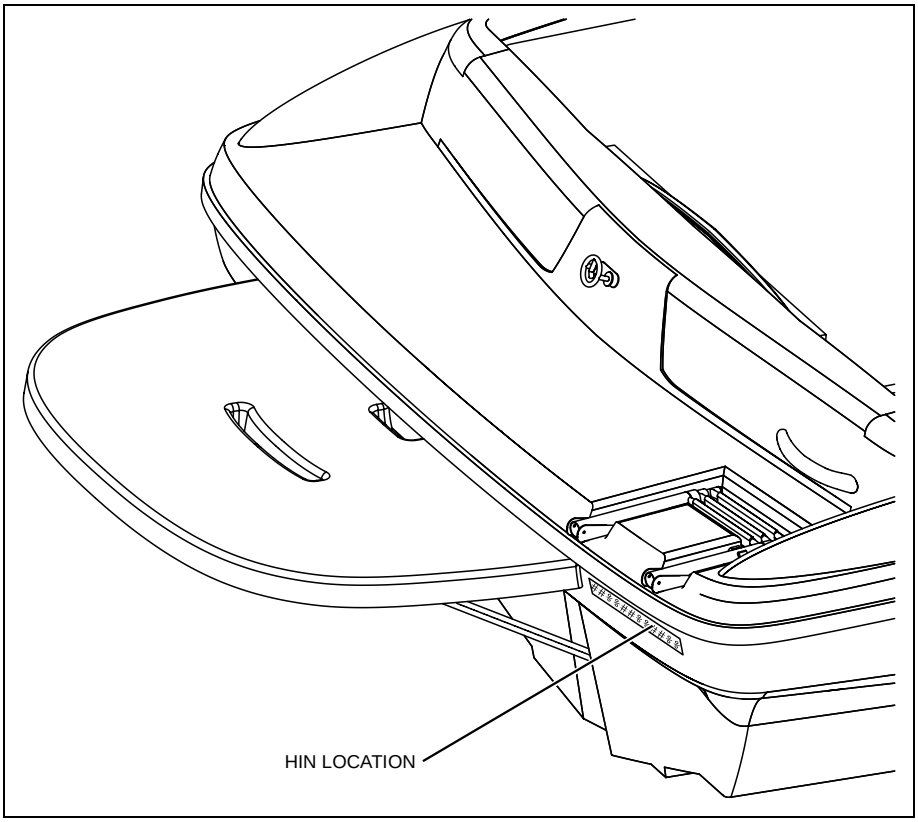

185, 195, 205, & 225

© 2006 Bayliner Technical Publications. All rights reserved.

No part of this publication may be reproduced, stored in any retrieval system, or transmitted in any form by any means, electronic, mechanical, photocopying, recording or otherwise, without prior written permission of Bayliner.

Printed in the United States of America.

General Notes

The material in this document is for information only and is subject to change without notice. While reasonable efforts have been made in the preparation of this document to assure its accuracy, Bayliner assumes no liability resulting from errors or omissions in this document, or from the use of information contained herein.

Due to our commitment to product improvement, Bayliner reserves the right to make changes in the product design, specifications, and equipment at any time without notice or obligation. Illustrations and/or photos may show optional equipment.

All Bayliner products meet or exceed USCG (United States Coast Guard) and/or NMMA (National Marine Manufacturer's Association) construction standards. Manufactured with 1,1,1 Trichloroethane, a substance which harms public health and environment during the manufacturing process by destroying ozone in the upper atmosphere.

Proprietary Rights

This document discloses subject matter in which Bayliner has proprietary rights. The information and design disclosed herein were originated by and are the property of Bayliner. Neither receipt nor possession thereof confers or transfers any right to reproduce, copy, alter or disclose the document or any part thereof, any information contained therein, or to construct boats or any item from it, except by written permission from or written agreement with Bayliner. This document is to be returned upon request to Bayliner.

Part Number
1820285

CONTENTS

1 Chapter 1: Welcome Aboard!

1 Dealer Service

1 Warranty Information

1 Boating Experience

2 Engine & Accessories Guidelines
- *2 Propeller*

2 Engine & Accessories Literature

3 Structural Limitation

3 Qualified Maintenance

3 Special Care For Moored Boats

4 Safety Standards

5 Carbon Monoxide (CO)
- *5 Facts about CO*
- *6 Where and How CO Can Accumulate*
- *6 How to Protect Yourself and Others From CO*
- *7 CO Checklists*
- *7 Carbon Monoxide Alarm System (If Equipped)*
- *8 More Information*

9 Chapter 2: Product Specifications

9 185

10 195

11 205

12 225

13 Chapter 3: Locations

13 Exterior Views
- *13 Hull Views*
- *14 Extended Swim Platform (If Equipped)*
- *15 185 Deck View*
- *16 195 Deck View*
- *17 205 Deck View*
- *18 225 Deck View*
- *19 Helm*

20 Component Locations

27 Chapter 4: Propulsion & Related Systems

27 Engine

27 Bilge Blower System

28 Fuel System
- *29 Fuel Fill & Vent*
- *29 Fuel Filters*
- *30 Anti-siphon Valve*
- *30 Fuel Filter/Water Separator (Diesel Engine Only)*

31 Quick Oil Drain System

32 Chapter 5: Controls & Gauges

32 Steering

32 Shift/Throttle Lever

32 Power Trim and Tilt

33 Gauges
- *33 Cleaning Gauges*
- *33 Gauge Fogging*
- *33 Radio Transmission Interference*
- *33 Fuel Gauge*

34 Chapter 6: Plumbing

34 Bilge Pump
- *34 Bilge Pump Testing*

36 Livewell System (185 Only) (If Equipped)

37 Freshwater System (225 Only) (If Equipped)
- *38 Freshwater System Winterization*
- *39 Transom Shower (If Equipped)*

39 Drain Systems
- *39 Deck Drains*

40 Chapter 7: Deck Equipment

40 Cleats and Tow Eyes

40 Bow Mount Trolling Motor (185 Only) (If Equipped)

40 Ski Tow Ring

41 Ski-Tow Tower (If Equipped)

41 Attaching the Ski-Tow Rope
42 Folding the Ski-Tow Tower

43 Canvas (If Equipped)

43 Convertible Top
44 Side Curtains (If Equipped)
45 185 Bimini Top (If Equipped)
46 205/225 Bimini Top (If Equipped)
47 Bow Cover (If Equipped)
48 Canvas Care
49 Clear Vinyl Care

50 Chapter 8: Entertainment System

50 Audio Equipment

51 Chapter 9: Convertible Seats, Beds, & Tables

51 Sleeper Seats (If Equipped - 185, 195 & 205 Only)

51 Operating Positions
51 Lounge positions

52 Jump Seat To Sunlounge Conversion (If Equipped - 185, 195 & 205 Only)

53 Passenger Seat to Sunlounge Conversion (225 Only)

54 Installing & Removing Table Leg (225 Only)

55 Removable Fishing Seats (If Equipped)

56 Chapter 10: Lights

56 Care and Maintenance

56 Navigation Lights

57 Chapter 11: Electrical System

58 12-Volt DC System

58 Battery
58 Fuses
58 Alternator
58 12-Volt DC Accessory Outlet(s)

59 Electrical Routings

59 185, 195 & 205 Deck Electrical Harnesses
60 225 Deck Electrical Harnesses
61 Hull Electrical Harness

62 Wiring Diagrams

62 185, 195 & 205
63 225

64 Important Records

65 Float Plan

Hazard Boxes & Symbols

The hazard boxes and symbols shown below are used throughout this supplement to call attention to potentially dangerous situations which could lead to either personal injury or product damage. **Read ALL warnings carefully and follow all safety instructions.**

⚠ DANGER!

This box alerts you to immediate hazards which WILL cause severe personal injury or death if the warning is ignored.

⚠ WARNING!

This box alerts you to hazards or unsafe practices which COULD result in severe personal injury or death if the warning is ignored.

⚠ CAUTION

This box alerts you to hazards or unsafe practices which COULD result in minor personal injury or cause product or property damage if the warning is ignored.

NOTICE

This box calls attention to installation, operation or maintenance information, which is important to proper operation but is not hazard related.

FIRE HAZARD!

EXPLOSION HAZARD!

NO OPEN FLAME!

ELECTRICAL HAZARD!

HOT HAZARD!

FALLING HAZARD!

ROTATING PROPELLER HAZARD!

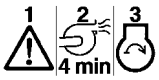

RUN BILGE BLOWERS FOR 4 MINUTES!

CO POISONING HAZARD!

Chapter 1: Welcome Aboard!

- This *Owner's Manual Supplement* provides information about your boat that is ***not*** covered in the *Sport Boat Owner's Manual*.
- ***Before*** using your boat, study this *Owner's Manual Supplement*, the *Sport Boat Owner's Manual*, and ***all*** engine and accessory literature carefully.
- Keep this *Owner's Manual Supplement* and the *Sport Boat Owner's Manual* on your boat in a secure, yet readily available place.

Dealer Service

- Your dealer is your key to service.
- Ask your dealer to explain ***all*** systems ***before*** taking delivery of your boat.
- Contact your dealer if you have any problems with your new boat.
- If your dealer cannot help, call our customer service hotline: 360-435-8957 or send us a FAX: 360-403-4235.
- Buy replacement parts from any authorized Bayliner dealer.

Warranty Information

- Bayliner offers a Limited Warranty on each new Bayliner purchased through an authorized Bayliner dealer.
- A copy of the Limited Warranty was included in your owner's packet.
- If you did not receive a copy of the Limited Warranty, please contact your Bayliner dealer or call 360-435-8957 for a copy.

Boating Experience

⚠ WARNING!

CONTROL HAZARD!

A qualified operator *must* be in control of the boat at *all* times. Do *NOT* operate your boat while under the influence of alcohol or drugs.

If this is your first boat or if you are changing to a type of boat you are ***not*** familiar with, for your own comfort and safety, obtain handling and operating experience ***before*** assuming command of this boat.

Take one of the boating safety classes offered by the U.S. Power Squadrons or the U.S. Coast Guard Auxiliary. For more course information, including dates and locations of upcoming classes, contact the organizations directly:

- U.S. Power Squadrons: 1-888-FOR-USPS (1-888-367-8777) or on the Internet at: http://www.usps.org
- In Canada, for the CPS courses call 1-888-CPS-BOAT.
- U.S. Coast Guard Auxiliary: 1-800-368-5647 or on the Internet at: http://www.cgaux.org

Outside the United States, your selling dealer, national sailing federation or local boat club can advise you of local sea schools or competent instructors.

Engine & Accessories Guidelines

NOTICE

When storing your boat please refer to your engine's operation and maintenance manuals.

- Your boat's engine and accessories were selected to provide optimum performance and service.
- Installing a different engine or other accessories may cause unwanted handling characteristics.
- Should you choose to install a different engine or to add accessories that will affect the boat's running trim, have an experienced marine technician perform a safety inspection and handling test ***before*** operating your boat again.

Certain modifications to your boat *will* result in cancellation of your warranty protection.

- ***Always*** check with your dealer ***before*** making any modifications to your boat.

Propeller

⚠ CAUTION

ENGINE DAMAGE HAZARD!

The factory standard propeller may not be the best for your particular boat and load conditions. Refer to the engine manual for engine RPM ratings. The engine should reach, but not exceed its full rated RPM when full-throttle is applied.

Immediately contact your local Bayliner dealer if:

- **The engine cannot reach its full rated RPM when full-throttle is applied, or;**
- **The engine exceeds its full rated RPM when full-throttle is applied.**

- Keep the propeller in good repair and at the correct pitch for your particular situation.
- A slightly bent or nicked propeller will adversely affect the performance of your boat.

Engine & Accessories Literature

- The engine and accessories installed on your boat come with their own operation and maintenance manuals.
- Read these manuals ***before*** using the engine and accessories.
- Unless noted otherwise, ***all*** engine and accessory literature referred to in this *Supplement* is included in your owner's packet.

Structural Limitation

The extended swim platform, if equipped, is designed to be lightweight for proper boat balance. The load limit for the extended swim platform is 30 pounds per square foot, evenly distributed.

Qualified Maintenance

⚠ WARNING!

To maintain the integrity and safety of your boat, allow *only* qualified personnel to perform maintenance on, or in any way modify the:

- **Steering System**
- **Propulsion System**
- **Engine Control System**
- **Fuel System**
- **Environmental Control System**
- **Electrical System**
- **Navigational System.**

- Failure to maintain your boat's systems (listed in the warning above) as designed could violate the laws in your jurisdiction and could expose you and other people to the danger of bodily injury or accidental death.
- Follow the instructions provided in the *Sport Boat Owner's Manual*, this *Supplement*, the engine owner's manual and ***all*** accessory literature.

Special Care For Moored Boats

NOTICE

- **To help seal the hull bottom and reduce the possibility of gelcoat blistering on moored boats, apply an epoxy barrier coating.**
- **The barrier coating should be covered with several coats of anti-fouling paint.**
- **Many states regulate the chemical content of bottom paints in order to meet environmental standards. Check with your local dealer about recommended bottom paints, and about the laws in effect in your area.**

- Whether moored in saltwater or freshwater, your boat will collect marine growth on its hull bottom.
- This will detract from the boat's beauty, greatly affect its performance and may damage the gelcoat.
- Periodically haul the boat out of the water and scrub the hull bottom with a bristle brush and a solution of soap and water.

Safety Standards

⚠ DANGER!

FALLING and ROTATING PROPELLER HAZARD!

- ***NEVER* allow anyone to ride on parts of the boat *NOT* designed for such use.**
- **Sitting on seat backs, lounging on the forward deck, bow riding, gunwale riding or occupying the transom platform while underway is especially hazardous and will cause personal injury or death.**

⚠ DANGER!

ROTATING PROPELLER and CARBON MONOXIDE POISONING HAZARD!

- ***NEVER* allow anyone to occupy, or hang from, the back deck or swim platform while the engine(s) are running.**
- **Teak surfing, dragging, or water skiing within 20 feet of a moving watercraft can be fatal.**

⚠ DANGER!

PERSONAL SAFETY HAZARD!

***ALWAYS* secure the anchor and other loose objects *before* getting underway. The anchor and other items that are *not* properly secured can come loose when the boat is moving and cause personal injury or death.**

⚠ WARNING!

A wide variety of components used on this vessel contain or emit chemicals known to the State of California to cause cancer and birth defects and other reproductive harm.

Examples Include:

- **Engine and generator exhaust**
- **Engine and generator fuel, and other liquids such as coolants and oil, especially used motor oil**
- **Cooking fuels**
- **Cleaners, paints, and substances used for vessel repair**
- **Waste materials that result from wear of vessel components**
- **Lead from battery terminals and from other sources such as ballast or fishing sinkers**

To Avoid Harm:

- **Keep away from engine, generator, and cooking fuel exhaust fumes.**
- **Wash exposed skin thoroughly with soap and water after handling the substances above.**

- Your boat's mechanical and electrical systems were designed to meet safety standards in effect at the time it was built.
- Some of these standards were mandated by law, all of them were designed to insure your safety, and the safety of other people, vessels and property.

In addition to this *Supplement*, please read the *Sport Boat Owner's Manual* and ***all*** accessory instructions for important safety standards and hazard information.

Carbon Monoxide (CO)

⚠ DANGER!

- **Carbon monoxide gas (CO) is colorless, odorless, tasteless, and extremely dangerous.**
- ***All* engines, generators, and fuel burning appliances produce CO as exhaust.**
- **Prolonged exposure to low concentrations or very quick exposure to high concentrations *will* cause *BRAIN DAMAGE* or *DEATH*.**
- **Teak surfing, dragging, or water skiing within 20 feet of a moving water-craft can be fatal.**

Facts about CO

- CO poisoning causes a significant number of boating deaths each year.
- Called the "silent killer", CO is an extremely toxic, colorless, odorless and tasteless gas.
- CO can harm or even kill you inside or outside your boat.
- CO can affect you whether you're underway, moored, or anchored.
- CO symptoms are similar to seasickness or alcohol intoxication.
- CO can make you sick in seconds. In high enough concentrations, even a few breaths can be fatal.
- Breathing CO blocks the ability of your blood to carry oxygen.
- The effects are cumulative, even low levels of exposure can result in injury or death.

Factors That Increase the Effects of CO Poisoning

- Age
- Smokers or people exposed to high concentrations of cigarette smoke
- Consumption of alcohol
- Lung disorders
- Heart problems
- Pregnancy

Where and How CO Can Accumulate

Stationary Conditions That Increase CO Accumulations Include:

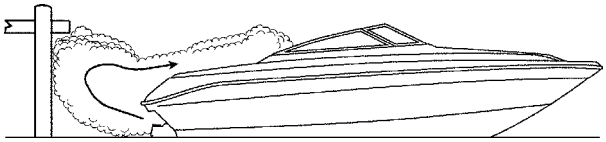

A. Using engine, generator, or other fuel burning device when boat is moored in a confined space.

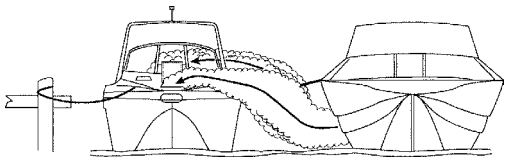

B. Mooring too close to another boat that is using its engine, generator, or other fuel burning device.

To correct stationary situations A and/or B:

- ***Close all*** windows, portlights and hatches.
- If possible, move your boat away from source of CO.

Running Conditions That Increase CO Accumulations Include:

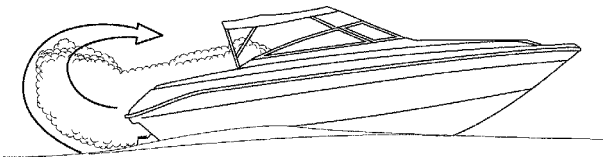

C. Running boat with trim angle of bow too high.

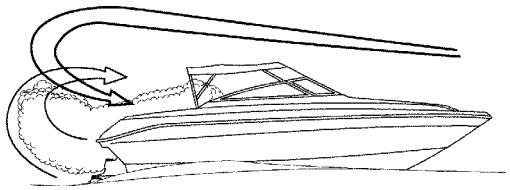

D. Running boat without through ventilation (station wagon effect).

To correct running situations C and/or D:

- Trim bow down.
- ***Open*** windows and canvas.
- When possible, run boat so that prevailing winds help dissipate exhaust.

How to Protect Yourself and Others From CO

- Know where and how CO may accumulate in and around your boat (see above).
- Maintain fresh air circulation throughout the boat at ***all*** times.
- Know where your engine and generator exhaust outlets are located and keep everyone away from these areas.
- ***Never*** sit on, or hang onto, the back deck or swim platform while the engine(s) are running.
- ***Never*** enter the areas under swim platforms where exhaust outlets are located.
- Although CO can be present without the smell of exhaust fumes, if exhaust fumes are detected on the boat, take ***immediate*** action to dissipate these fumes.
- Treat symptoms of seasickness as possible CO poisoning. Get the person into fresh air ***immediately***. Seek medical attention—unless you're sure it's not CO.
- Install and maintain CO alarms inside your boat. Do ***not*** ignore any alarm. Replace alarms as recommended by the alarm manufacturer.
- Follow the checklists provided on the next page.
- Get a Vessel Safety Check.

For information on how to get a free VESSEL SAFETY CHECK, visit www.vesselsafetycheck.org or contact your local U.S. Coast Guard Auxiliary or United States Power Squadrons®.

- U.S. Coast Guard Auxiliary: 1-800-368-5647 or on the Internet at: http://www.cgaux.org
- U.S. Power Squadrons: 1-888-FOR-USPS (1-888-367-8777) or on the Internet at: http://www.usps.org

CO Checklists

Trip Checklist

- ❏ Make sure you know where the exhaust outlets are located on your boat.
- ❏ Educate ***all*** passengers about the symptoms of CO poisoning and where CO may accumulate.
- ❏ When docked, or rafted with another boat, be aware of exhaust emissions from the other boat.
- ❏ Listen for any change in exhaust sound, which could indicate an exhaust component failure.
- ❏ Test the operation of each CO alarm by pressing the test button.

Monthly Checklist

- ❏ Make sure ***all*** exhaust clamps are in place and secure.
- ❏ Look for exhaust leaking from exhaust system components. Signs include rust and/or black streaking, water leaks, or corroded or cracked fittings.
- ❏ Inspect rubber exhaust hoses for burned, cracked, or deteriorated sections. ***All*** rubber hoses should be pliable and free of kinks.

Annual Checklist

Have a Qualified Marine Technician:

- ❏ Replace exhaust hoses if cracking, charring, or deterioration is found.
- ❏ Ensure that your engines and generators are properly tuned, and well maintained.
- ❏ Inspect each water pump impeller and the water pump housing. Replace if worn. Make sure cooling systems are in working condition.
- ❏ Inspect ***all*** metallic exhaust components for cracking, rusting, leaking, or loosening. Make sure they check the cylinder head gasket, exhaust manifold, water injection elbow, and the threaded adapter nipple between the manifold and the elbow.
- ❏ Clean, inspect, and confirm proper operation of the generator cooling water anti-siphon valve (if equipped).

Carbon Monoxide Alarm System (If Equipped)

NOTICE

The stereo memory and CO monitor(s) place a small, but constant drain on the battery.

- Do ***not*** disconnect the alarm system.
- Read the manufacturer's instructions for your CO alarm system. If you did not receive an instruction manual, call (800) 383-0269 and one will be mailed to you.

If your boat is ***not*** equipped with a carbon monoxide alarm, consider purchasing one from your dealer or marine supply store.

More Information

For more information about how you can prevent carbon monoxide poisoning on recreational boats and other ways to boat more safely, contact:

United States Coast Guard
Office of Boating Safety (G-OPB-3)
2100 Second Street SW
Washington, DC 20593
www.uscgboating.org
1-800-368-5647

National Marine Manufacturers Association (NMMA)
200 East Randolph Drive
Suite 5100
Chicago, IL 60601-9301
www.nmma.org
312-946-6200

American Boat & Yacht Council, Inc. (ABYC)
3069 Solomon's Island Road
Edgewater, MD 21037-1416
www.abycinc.org
410-956-1050

For information on how to get a free VESSEL SAFETY CHECK, visit www.vesselsafetycheck.org or contact your local U.S. Coast Guard Auxiliary or United States Power Squadrons®.

- U.S. Coast Guard Auxiliary: 1-800-368-5647 or on the Internet at: http://www.cgaux.org
- U.S. Power Squadrons: 1-888-FOR-USPS (1-888-367-8777) or on the Internet at: http://www.usps.org

Chapter 2: Product Specifications

185

STANDARD SEATING LAYOUT

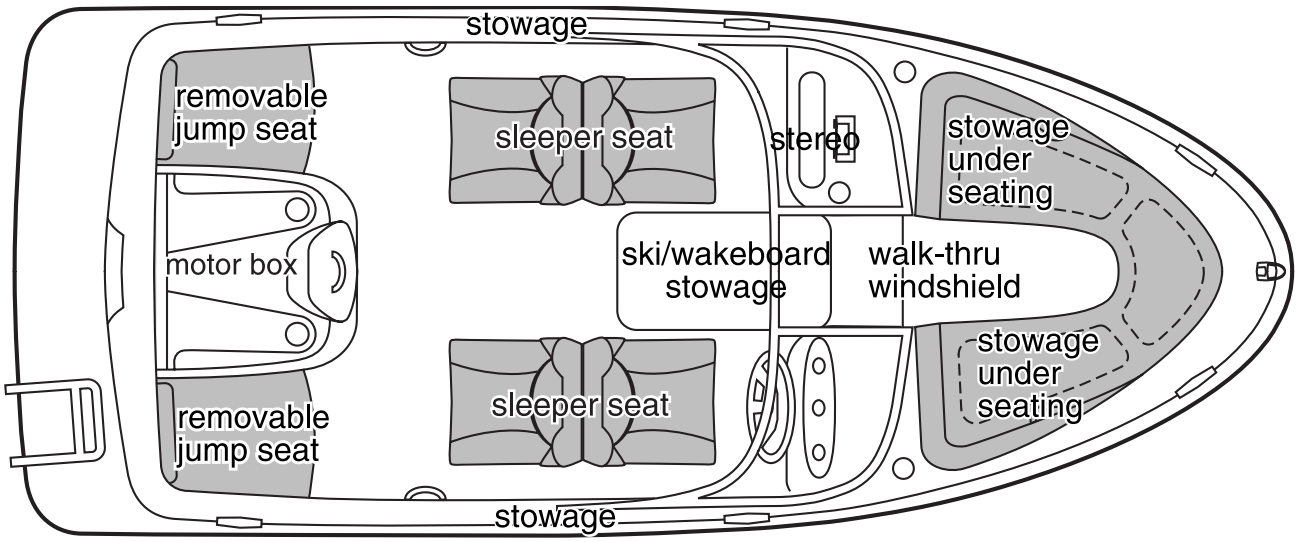

SPORT SEATING LAYOUT

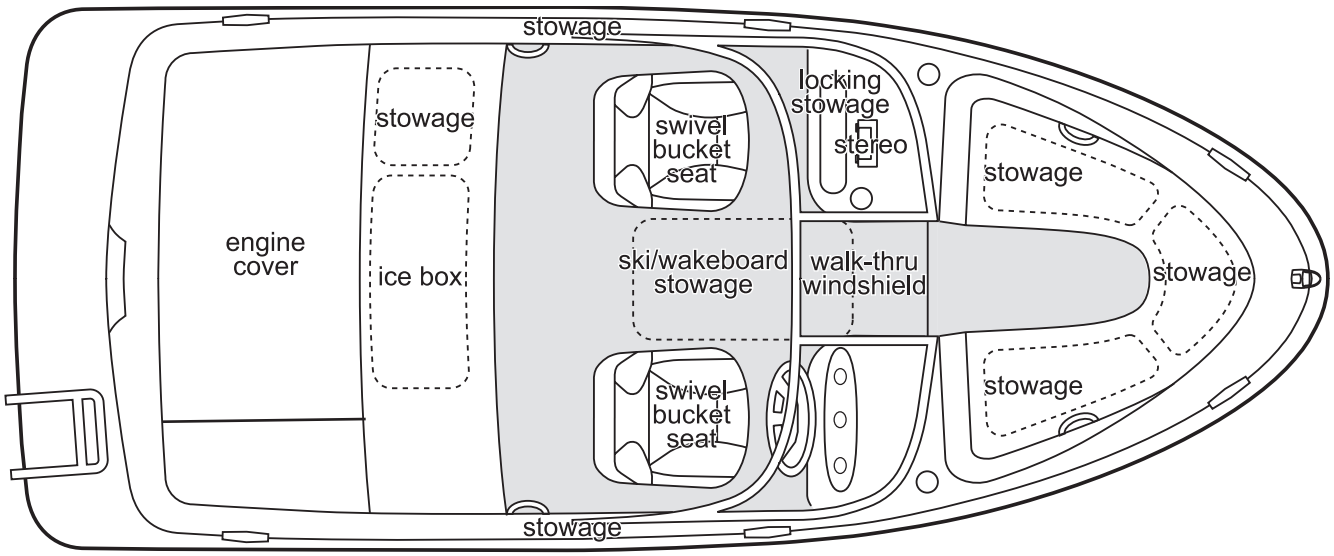

Overall Length	Bridge Clearance	Beam	Draft (Drive Up)	Draft (Drive Down)	Fuel Capacity (gal.)
18' 0"	6' 0"	7' 7"	1' 8"	3' 0"	28

195

STANDARD SEATING LAYOUT

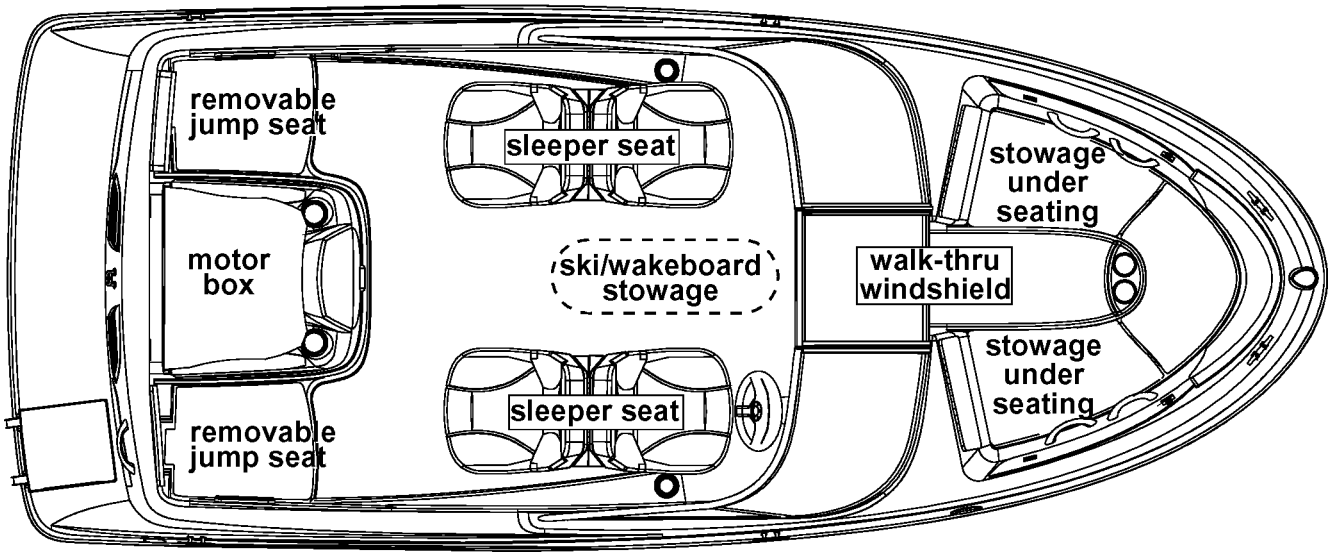

SPORT SEATING LAYOUT

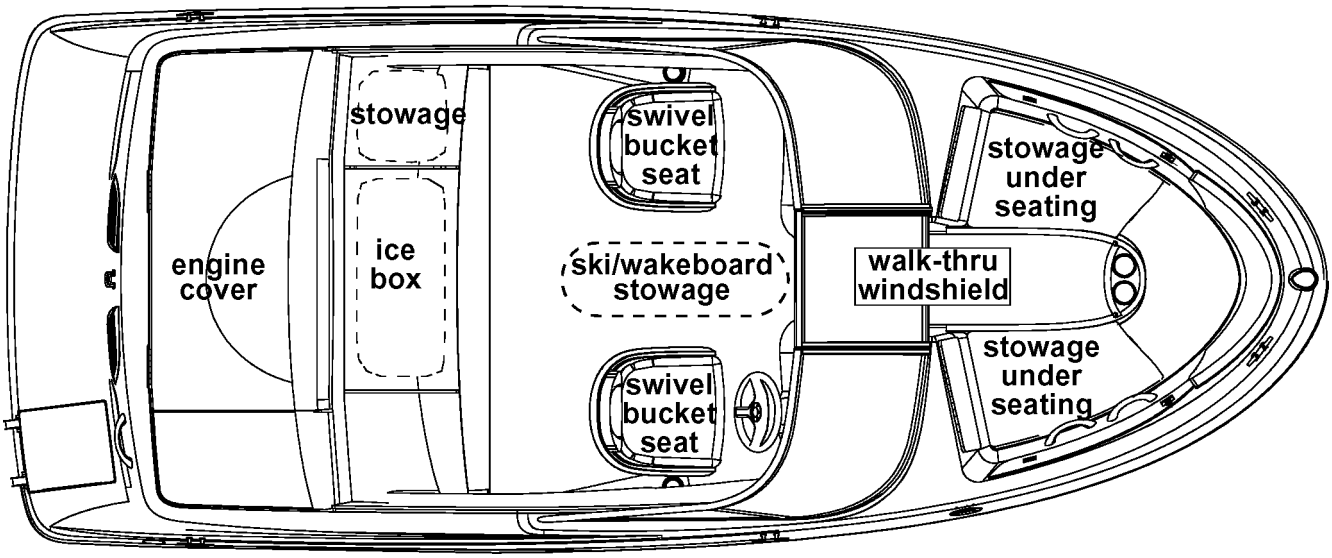

Overall Length	Bridge Clearance	Beam	Draft (Drive Up)	Draft (Drive Down)	Fuel Capacity (gal.)
19' 0"	7' 0"	7' 11"	1' 9"	3' 3"	35

205

STANDARD SEATING LAYOUT

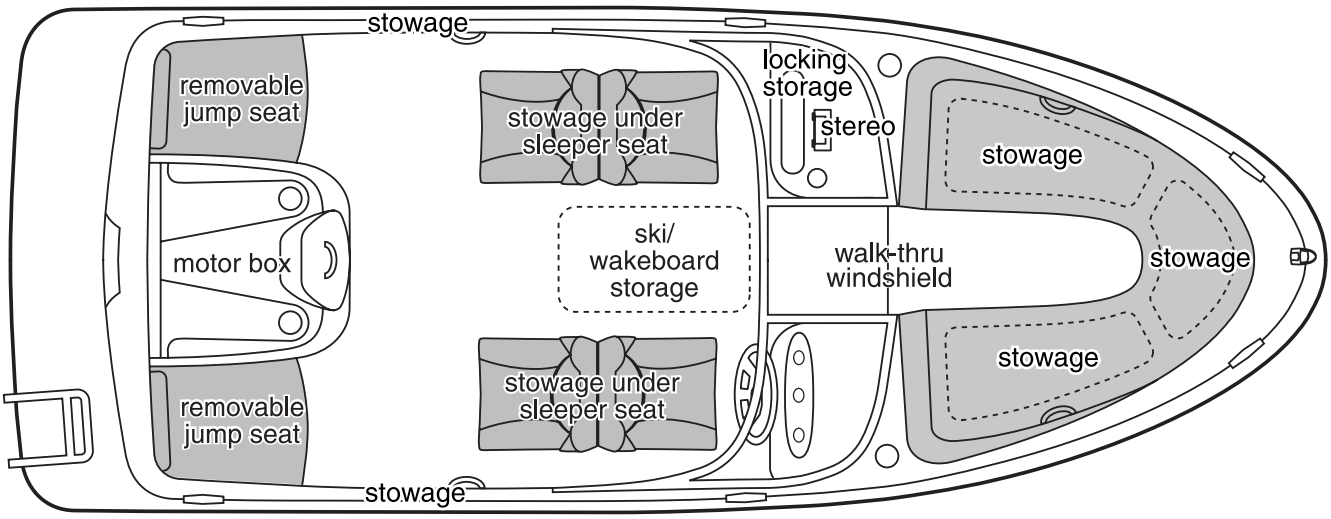

SPORT SEATING LAYOUT

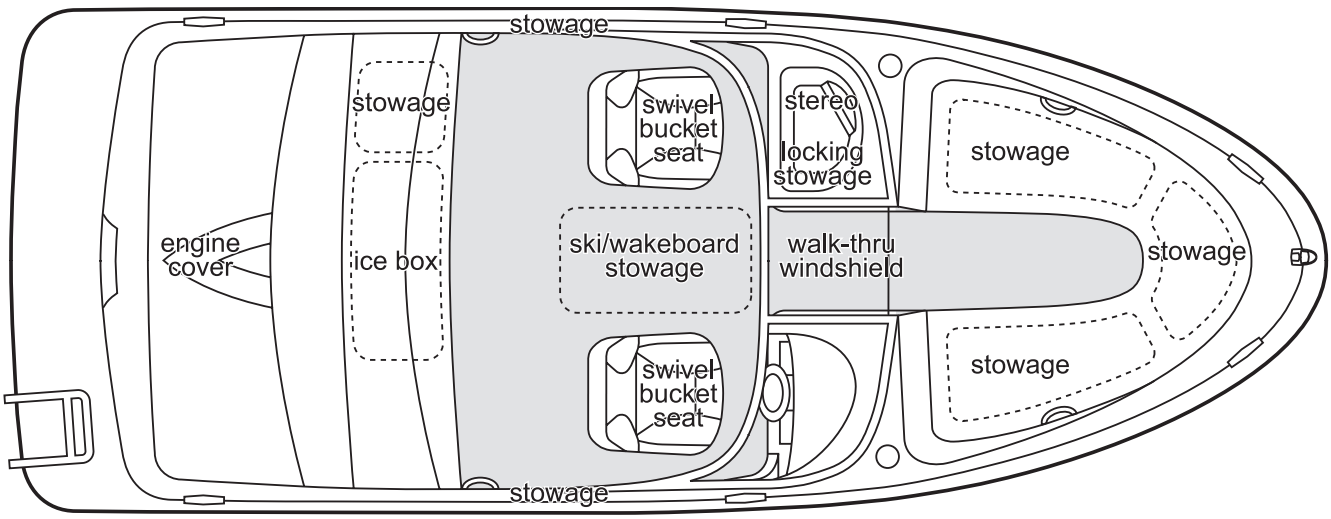

Overall Length	Bridge Clearance	Beam	Draft (Drive Up)	Draft (Drive Down)	Fuel Capacity (gal.)
20' 4"	4' 1"	8' 0"	1' 6"	3' 1"	37

225

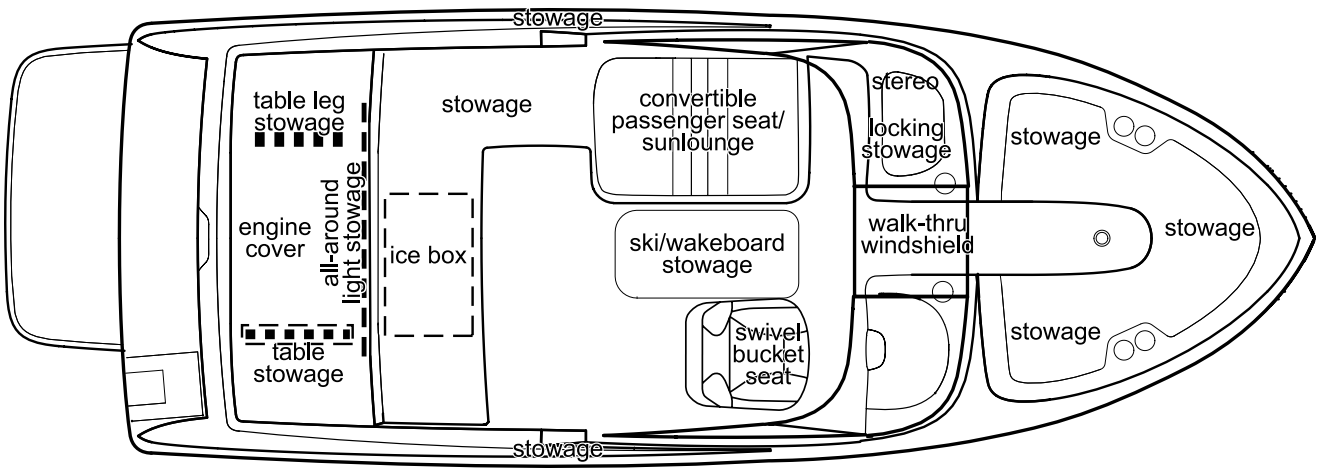

Overall Length	Bridge Clearance	Beam	Draft (Drive Up)	Draft (Drive Down)	Fuel Capacity (gal.)	Freshwater Tank Capacity (gal.)
22' 1"	7' 4"	8' 6"	1' 6"	3' 0"	50	10

Chapter 3: Locations

Exterior Views

Hull Views

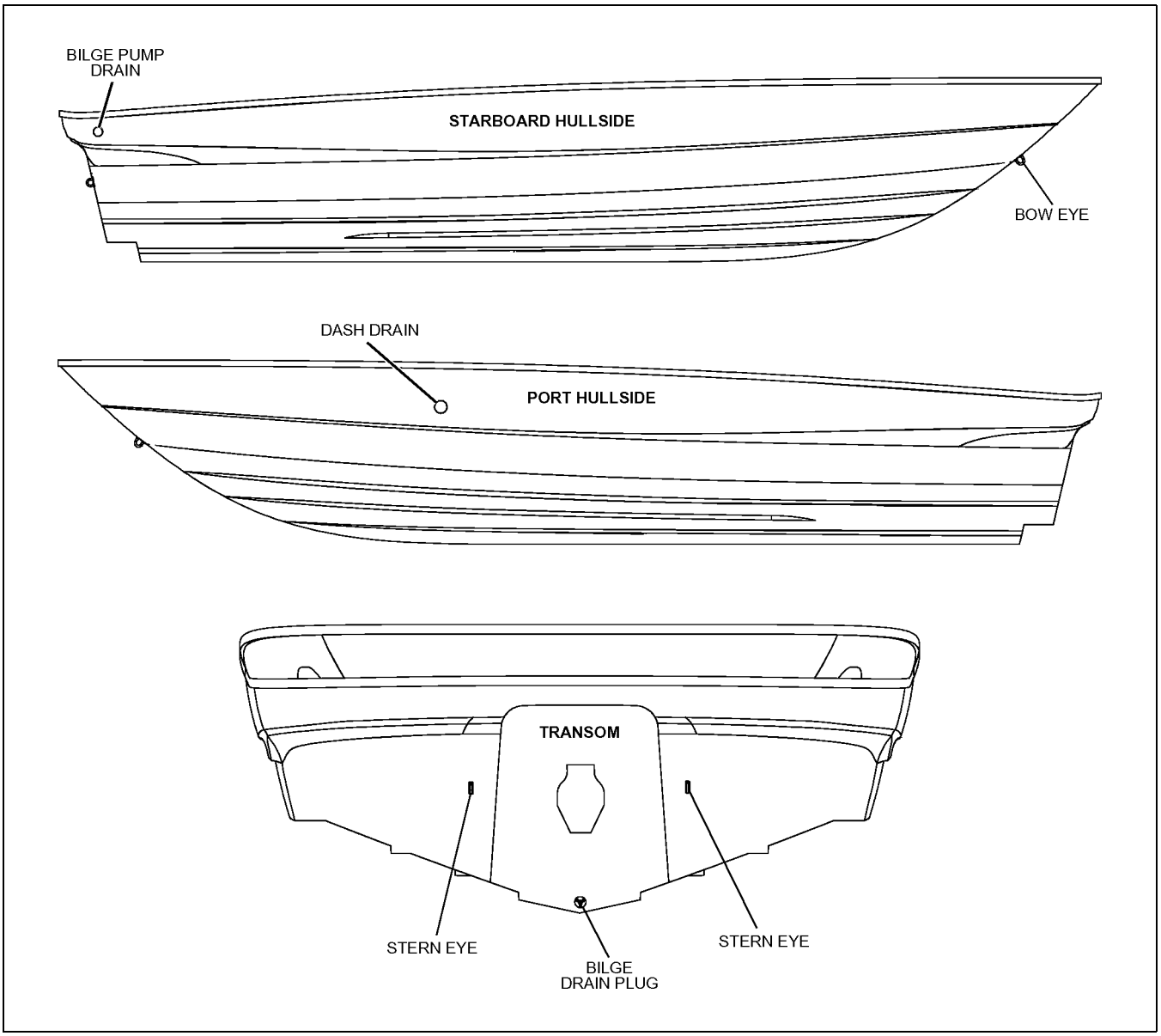

Extended Swim Platform (If Equipped)

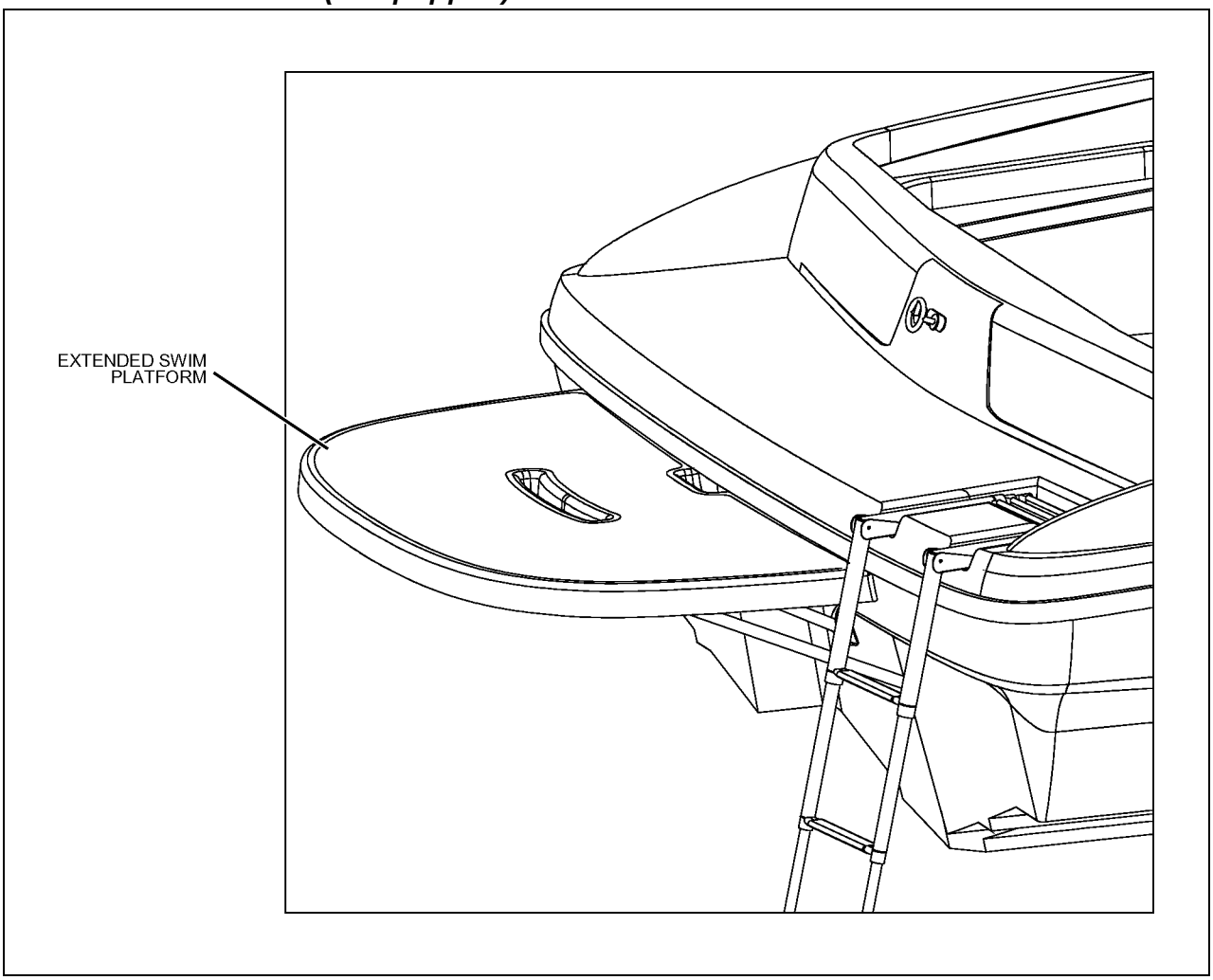

185 Deck View

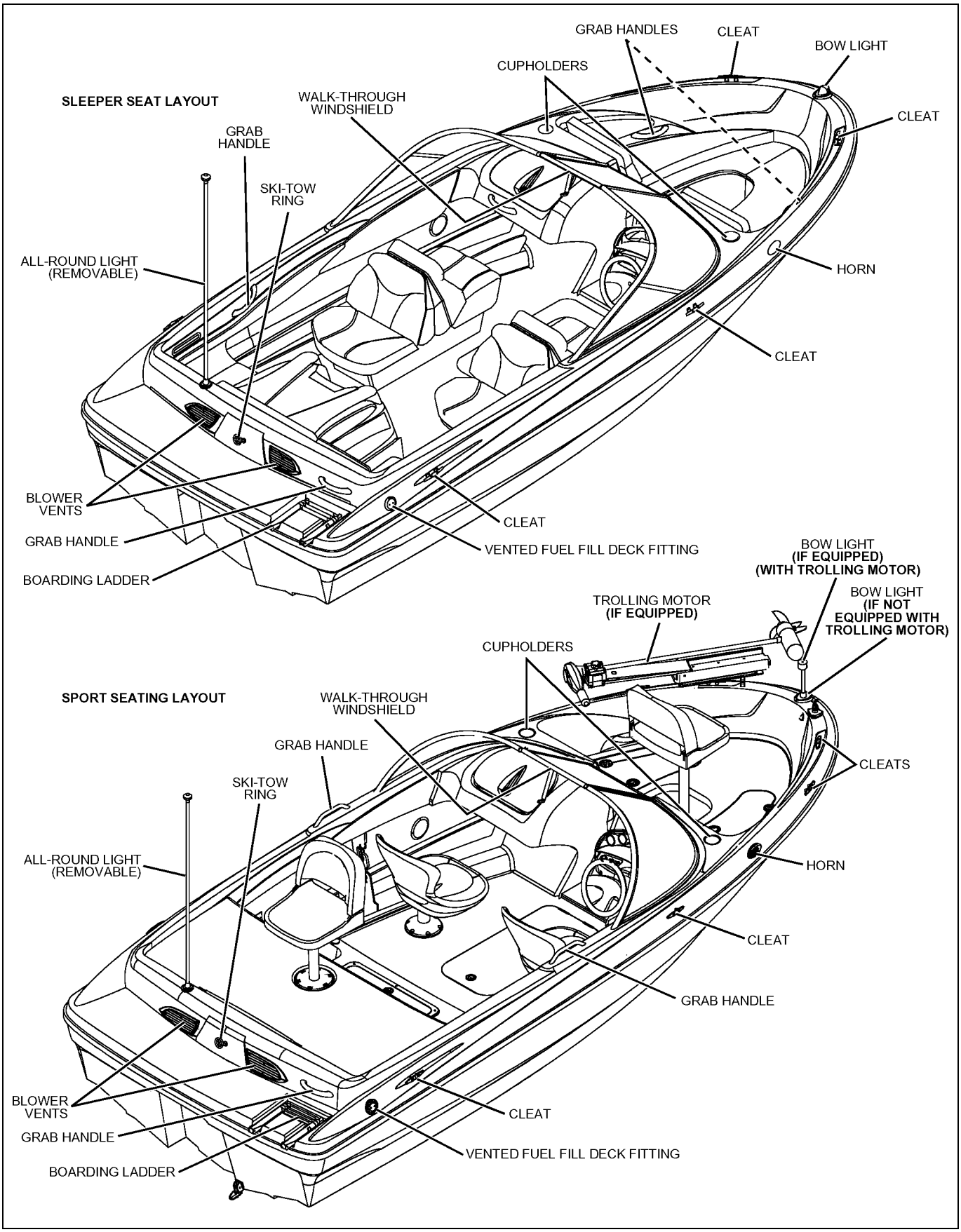

195 Deck View

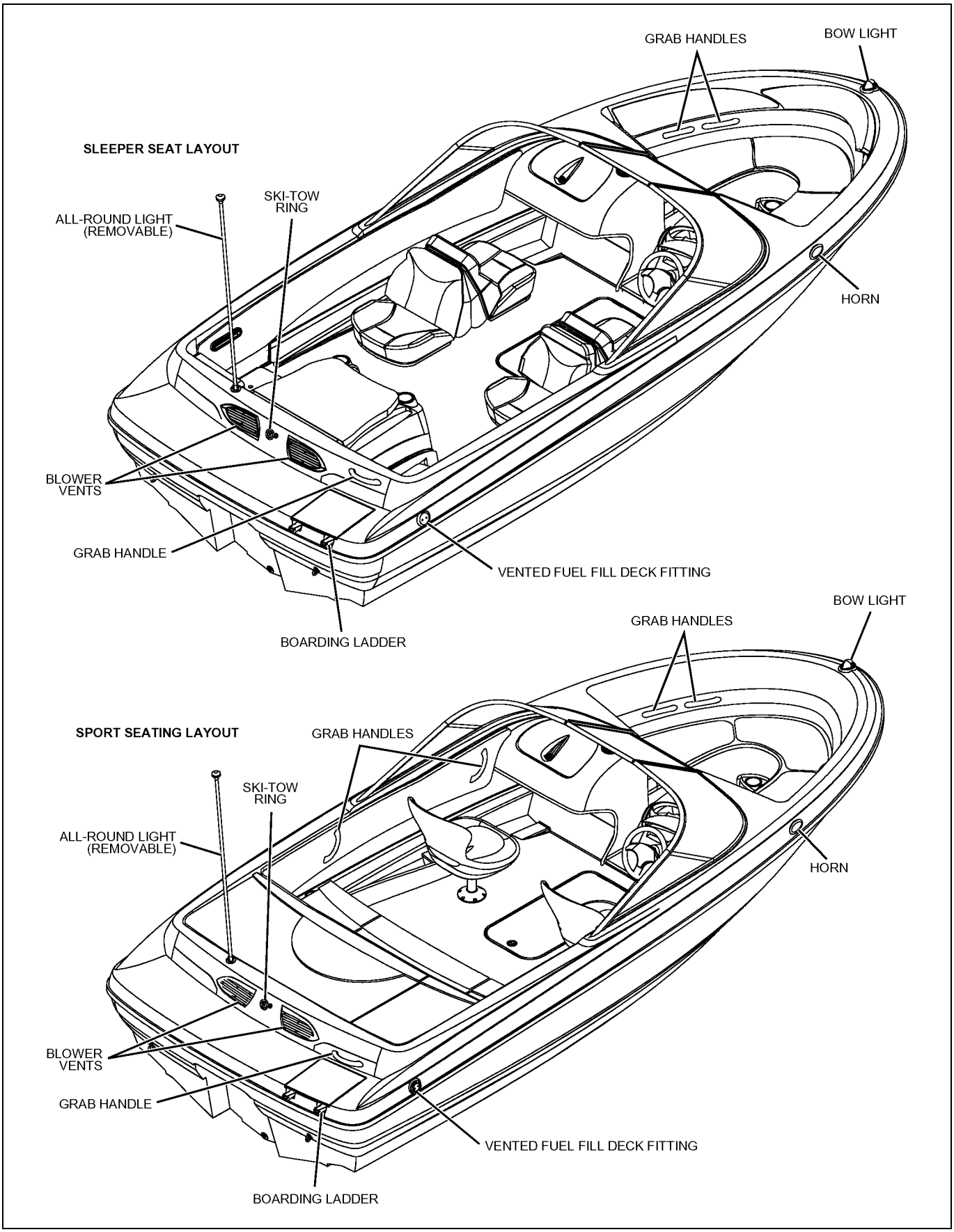

205 Deck View

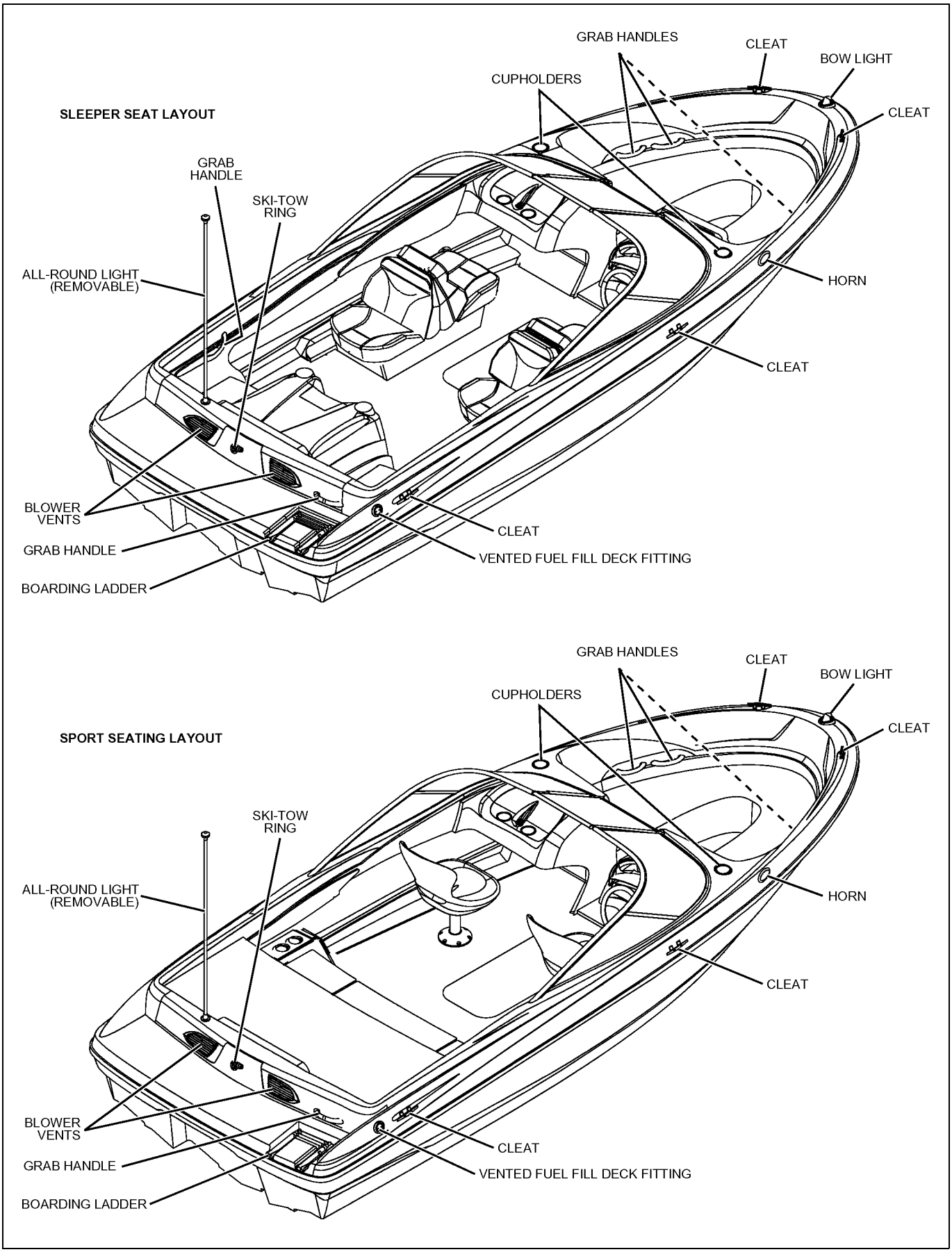

225 Deck View

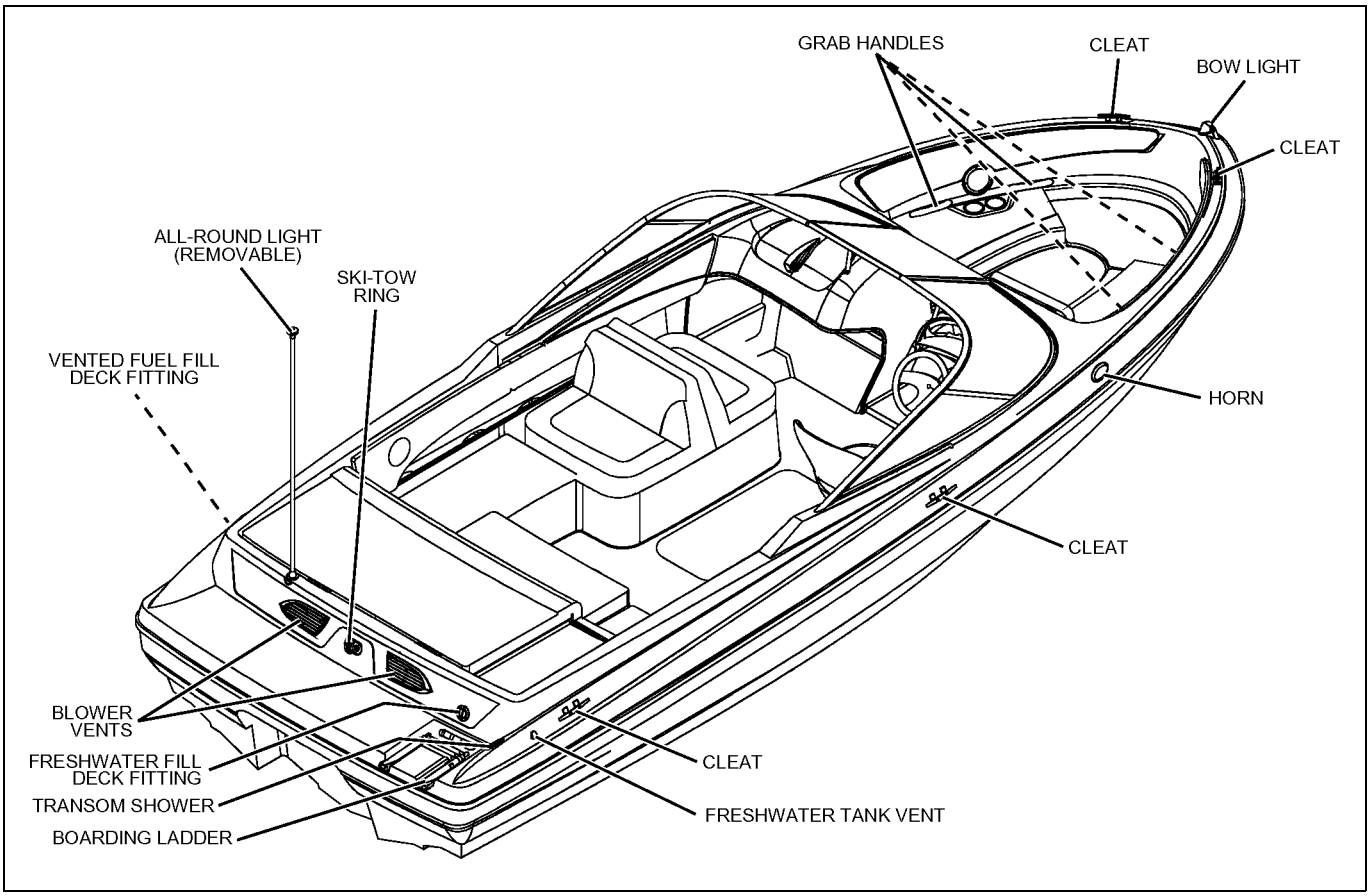

Helm

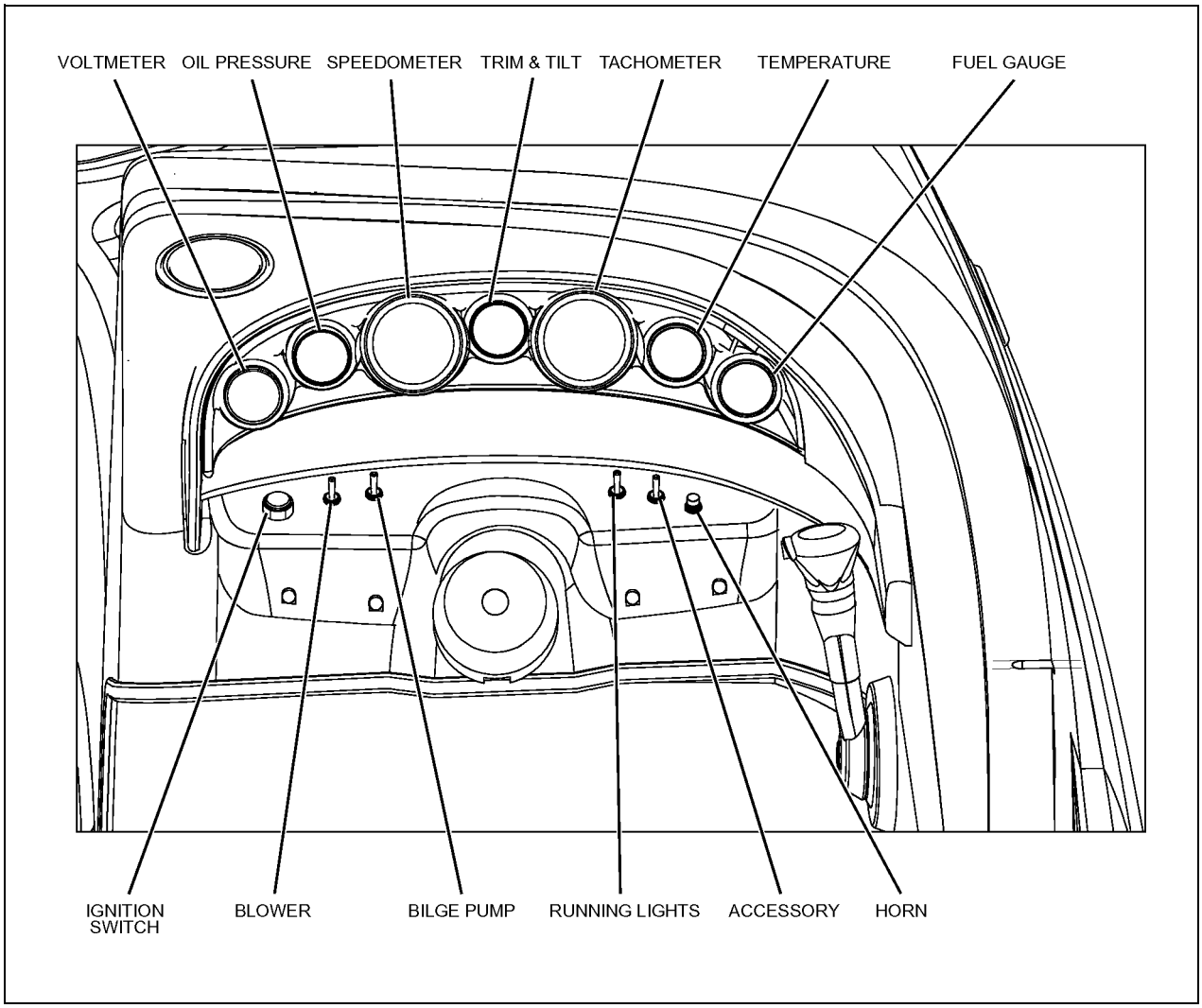
VOLTMETER
OIL PRESSURE
SPEEDOMETER
TRIM & TILT
TACHOMETER
TEMPERATURE
FUEL GAUGE
IGNITION SWITCH
BLOWER
BILGE PUMP
RUNNING LIGHTS
ACCESSORY
HORN

Component Locations

12-Volt Accessory Outlets - 185, 195 & 205: One on the starboard side dash panel and one next to the CD player in the port glove box.

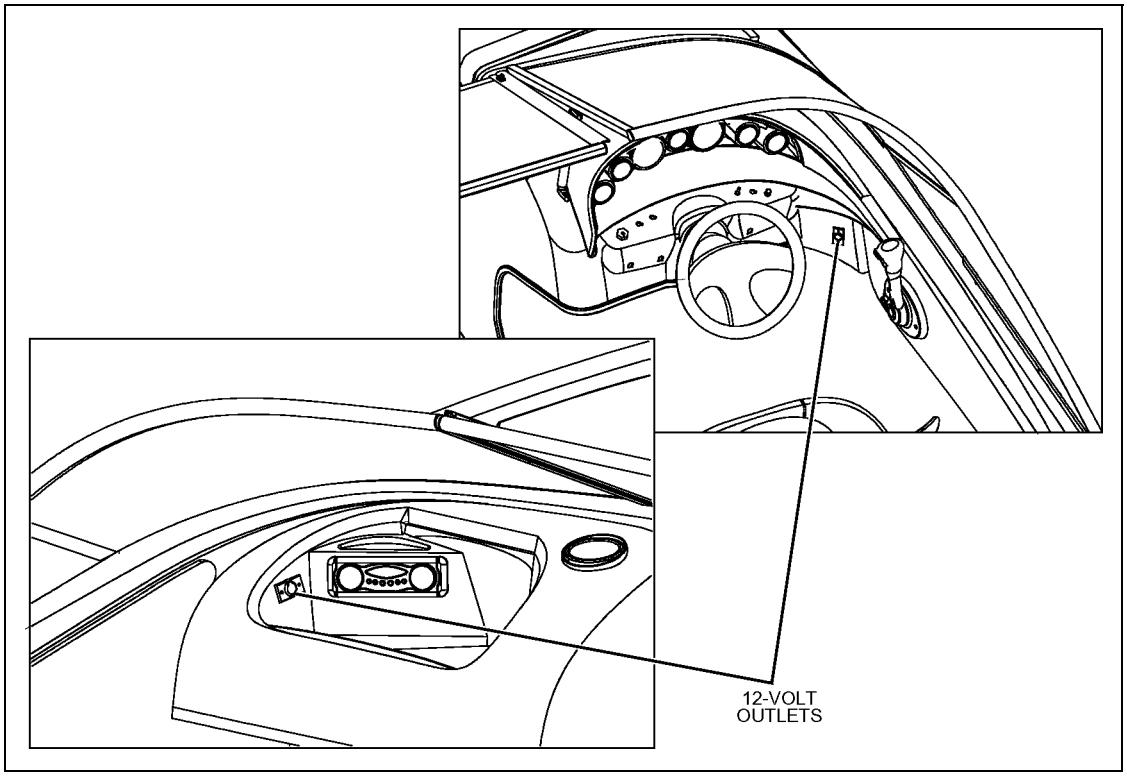

12-Volt Accessory Outlets - 225: One next to the CD player in the port glove box and one on the starboard side of the cockpit next to the aft bench seat.

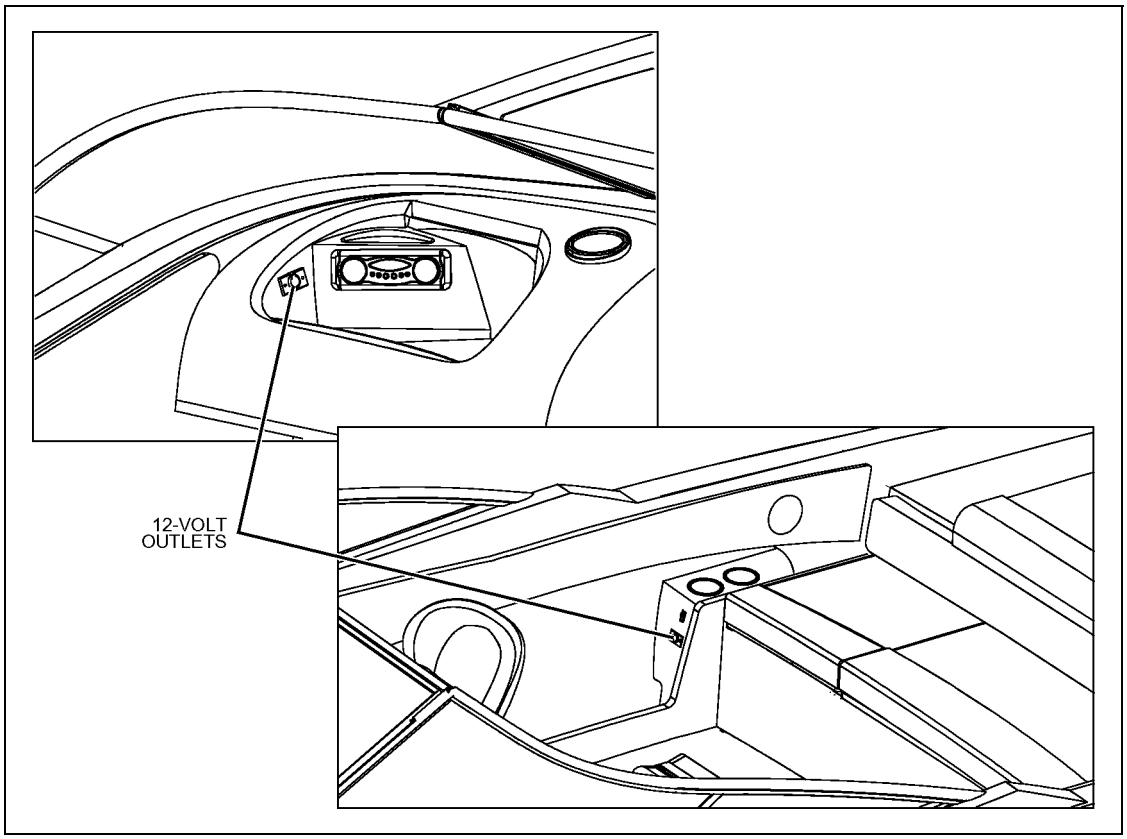

Battery - 185, 195 & 205: Located under the port jump seat cushion.

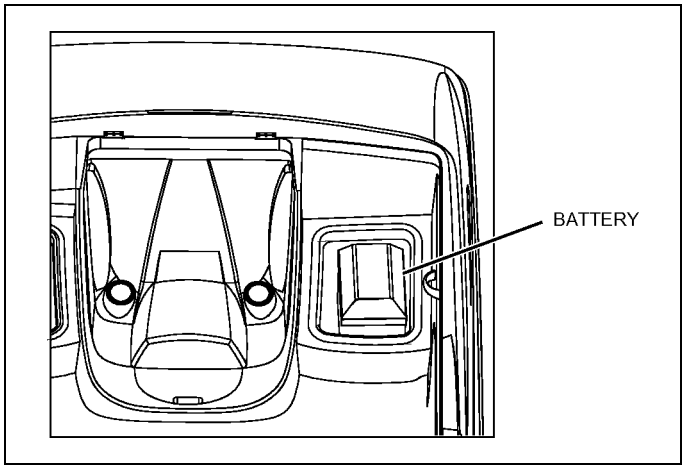

Battery - 225: Located on the port side of the engine compartment.

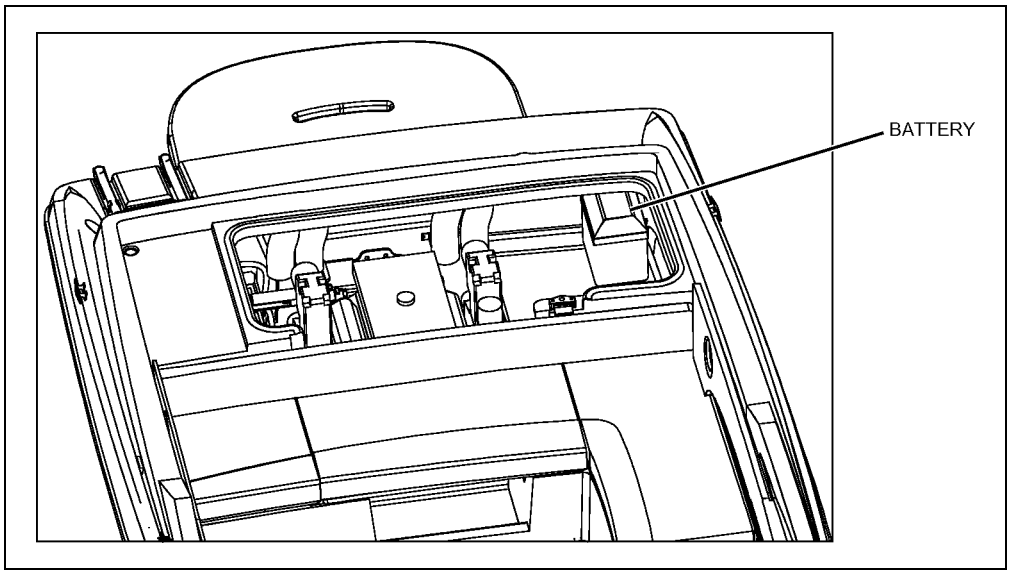

Bilge Pump: Located in the forward area of the engine compartment bilge.

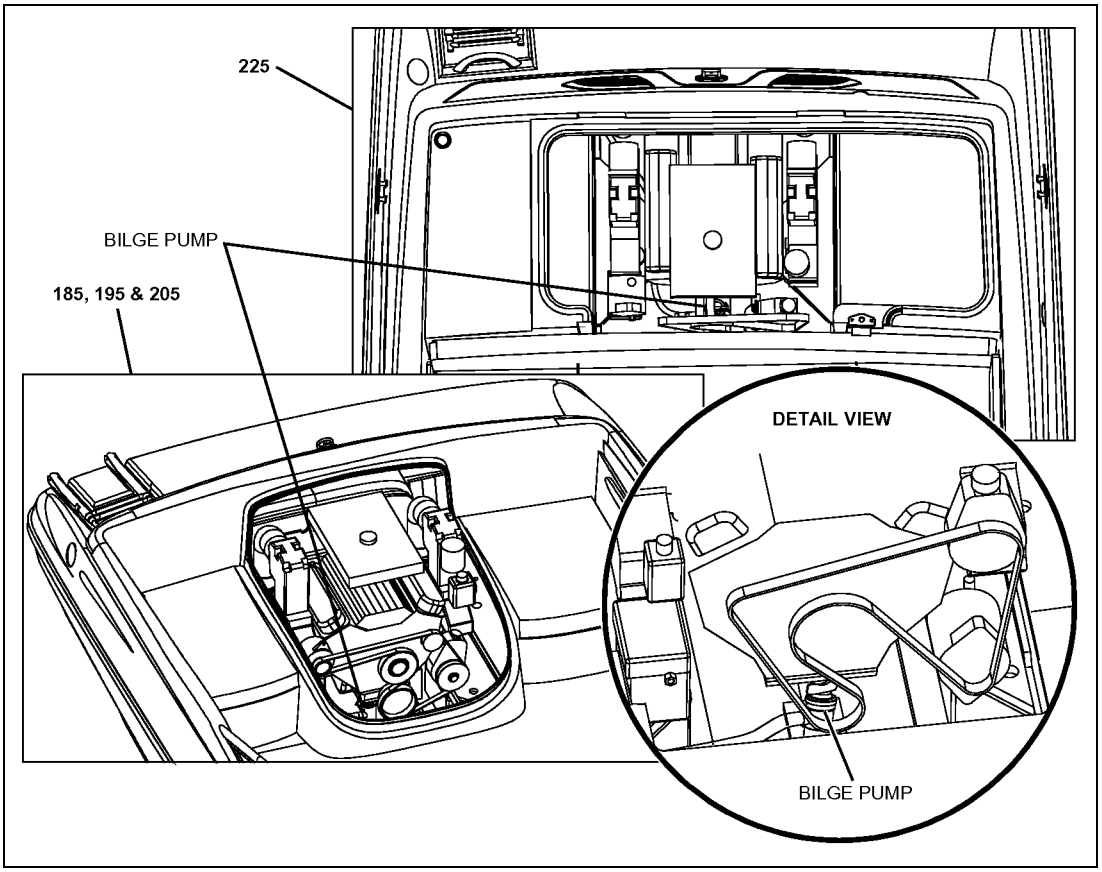

Engine Circuit Breaker: Located on the engine. Refer to the engine manual for details.

Freshwater Fill Deck Fitting (225 Only) (If Equipped): Located on the aft deck, above the boarding ladder.

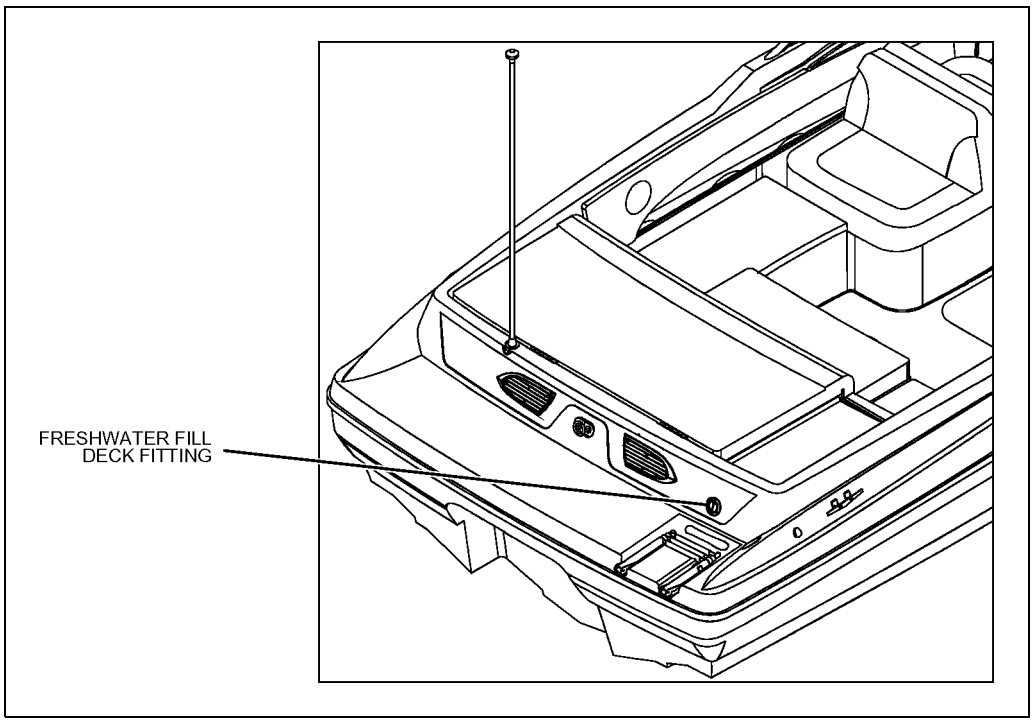

Freshwater Pump Switch (225 Only) (If Equipped): Located on the starboard side next to the aft bench seat.

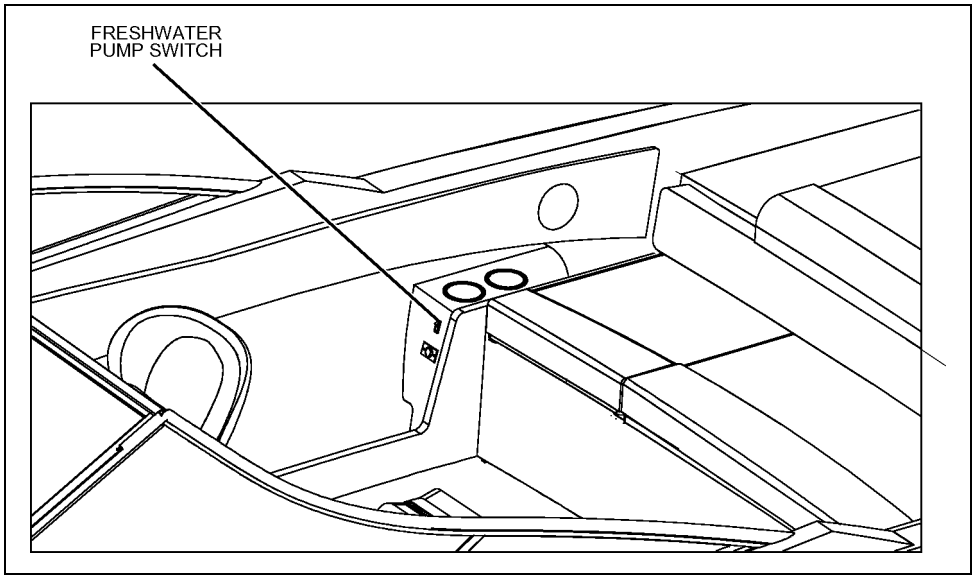

Fuse Block: Access is through the starboard aft seat back in the bow seating area.

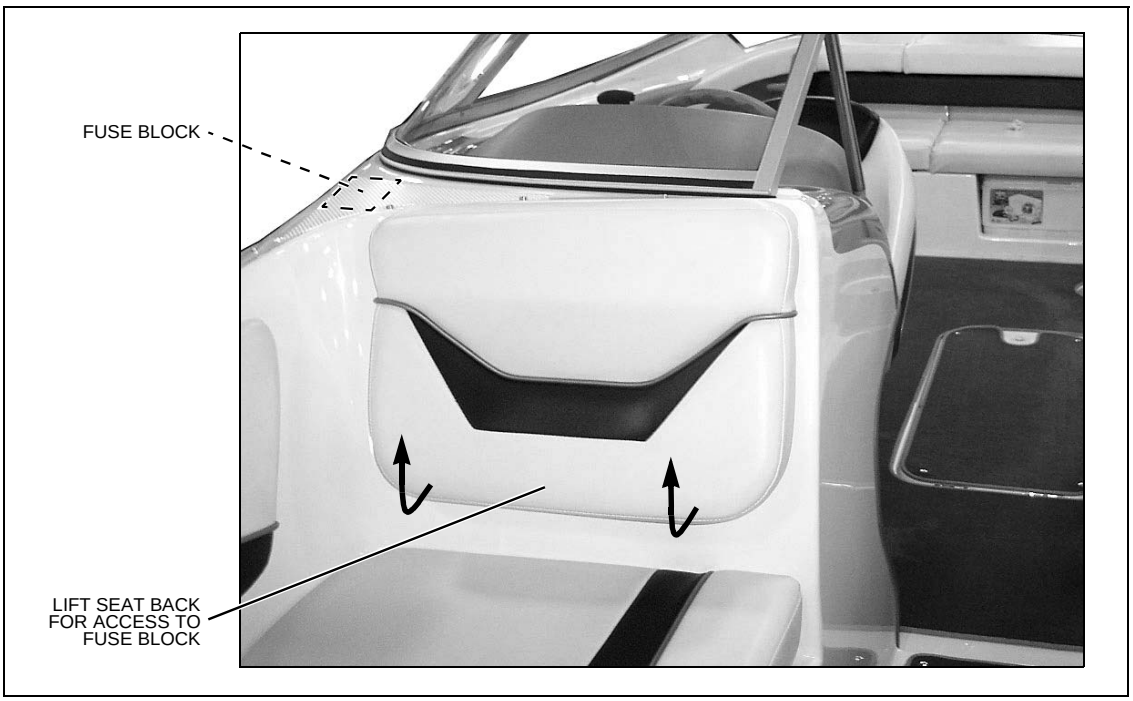

Fuel Fill Deck Fitting - 185, 195 & 205:
Located on the starboard side of the aft deck.

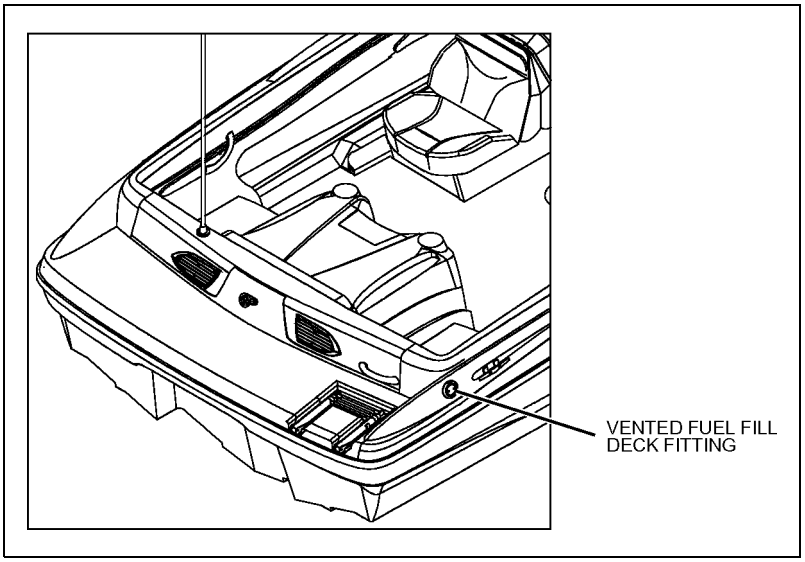

Fuel Fill Deck Fitting - 225:
Located on the port side of the aft deck.

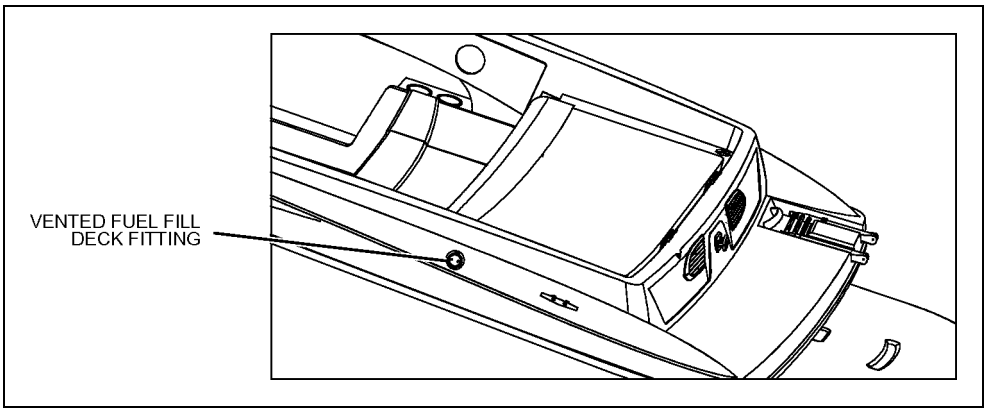

Livewell Aerator Control - (185 Only) (If Equipped):

- Located inside the livewell.
- Access by removing the seat cushion and lifting the livewell hatch.

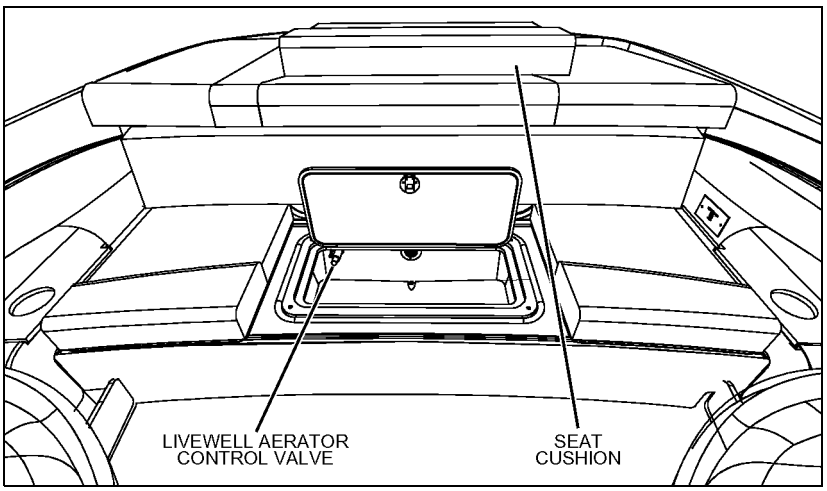

Livewell Drain Pump - (185 Only) (If Equipped):

- Located in the forward area of the engine compartment.
- Access by lifting the motorbox cover.

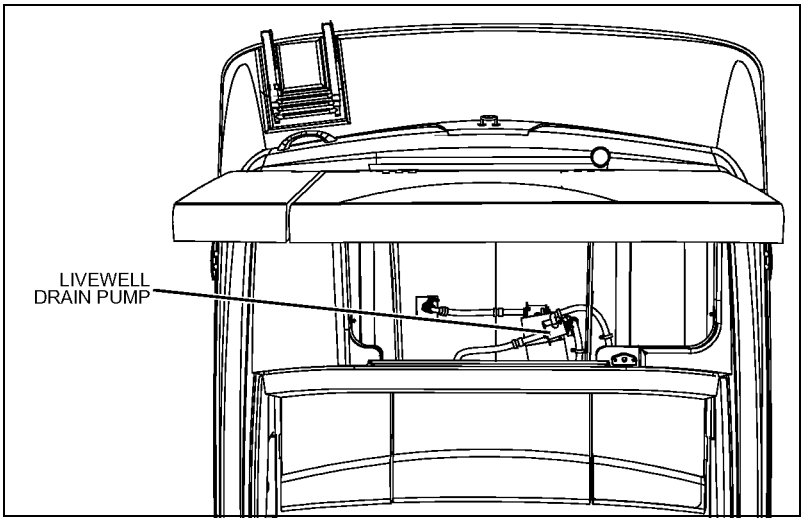

Livewell Seawater Intake Pump & Seacock - (185 Only) (If Equipped):

- Located in the forward area of the engine compartment.
- Access by lifting the motorbox cover.

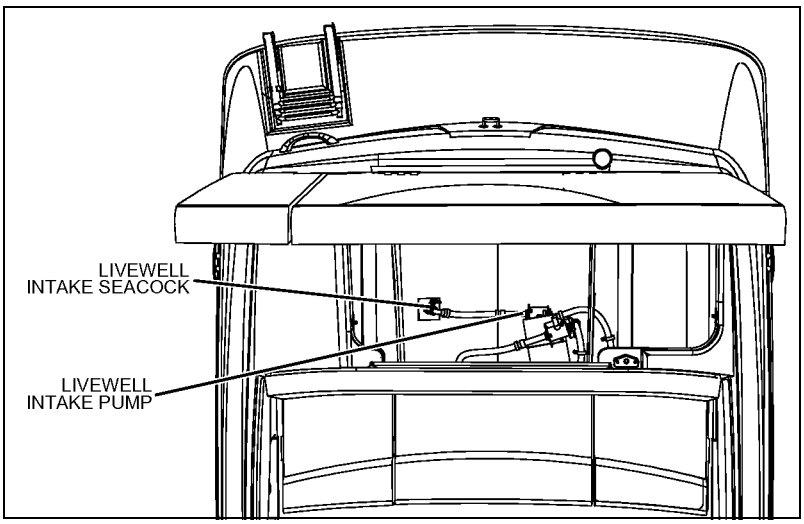

Livewell Fill & Drain Switch - (185 Only) (If Equipped): Located at the helm.

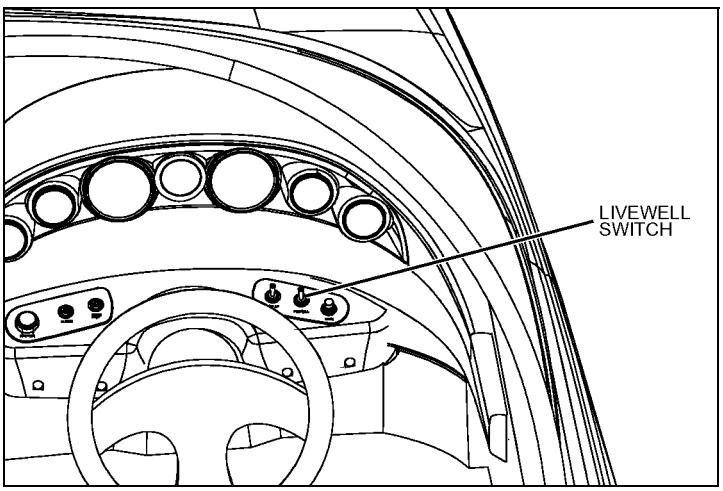

Trolling Motor - (185 Only) (If Equipped):

Located on the forward deck.

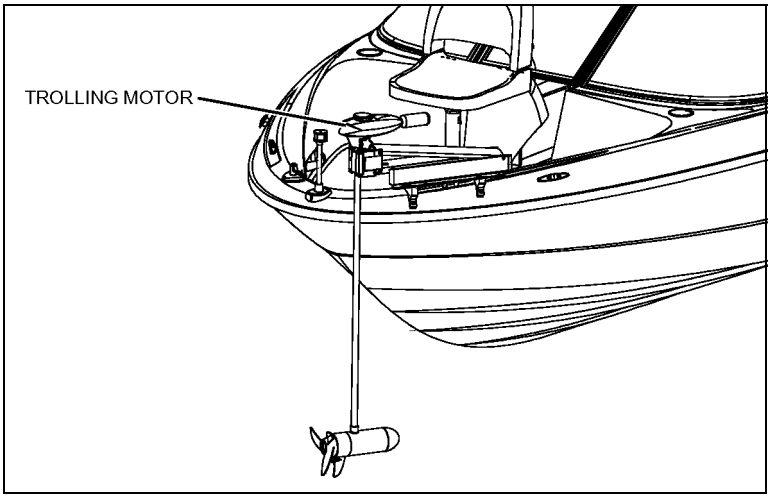

Trolling Motor 12-Volt DC Circuit Breaker - (185 Only) (If Equipped):

- Located under the starboard aft jump seat.
- Access by removing the starboard aft jump seat.

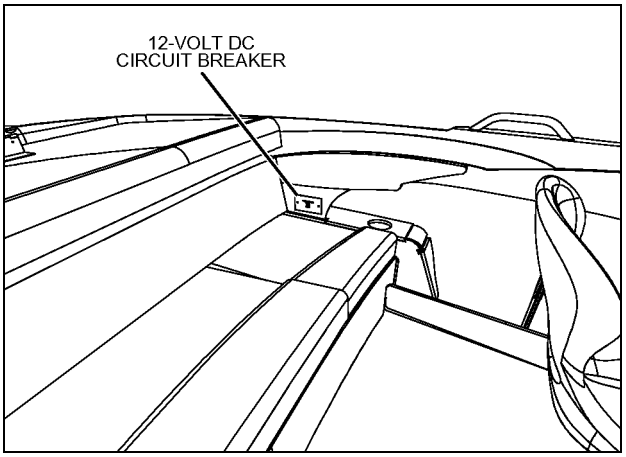

Trolling Motor 12-Volt DC Receptacle - (185 Only) (If Equipped): Located at the bow, just above the port forward seat cushion.

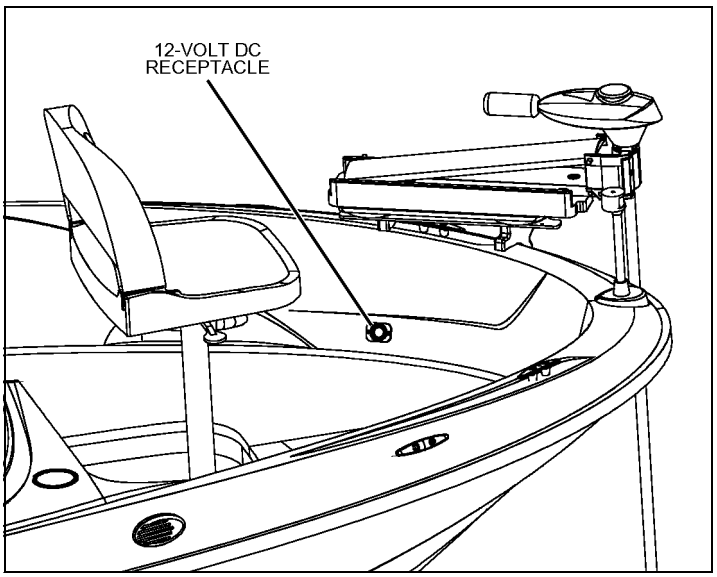

Chapter 4: Propulsion & Related Systems

Engine

Read the engine operation and maintenance manuals ***before*** starting or doing any maintenance on the engine OR engines.

Bilge Blower System

⚠ WARNING!

FIRE/EXPLOSION HAZARD

- **Use of the bilge blower system is *NOT A GUARANTEE* that explosive fumes have been removed.**
- ***BEFORE* starting the engine *ALWAYS* use the "sniff test" to check the engine and bilge areas for fuel vapors.**
- **If you smell fuel, do *NOT* start the engine and do *NOT* turn *On* any electrical devices.**
- **If you smell fuel and the engine is already running, shut *Off* the engine and turn *Off all* electrical devices. Investigate *immediately*.**
- **Do *NOT* obstruct or modify the bilge blower system.**

- The bilge blower removes explosive fumes from the engine and bilge areas.
- Fresh air is drawn into the engine and bilge areas through the vents.

To make sure the engine and bilge areas are properly ventilated:

- Use the "sniff test" to check the engine and bilge areas for fuel vapors ***before*** starting the engine.
- ***Always*** run the bilge blower for at least four minutes ***before*** starting the engine.
- Continue to run the blower until your boat has reached cruising speed.
- ***Always*** run the blower when running the boat below cruising speed.

BILGE BLOWER SYSTEM

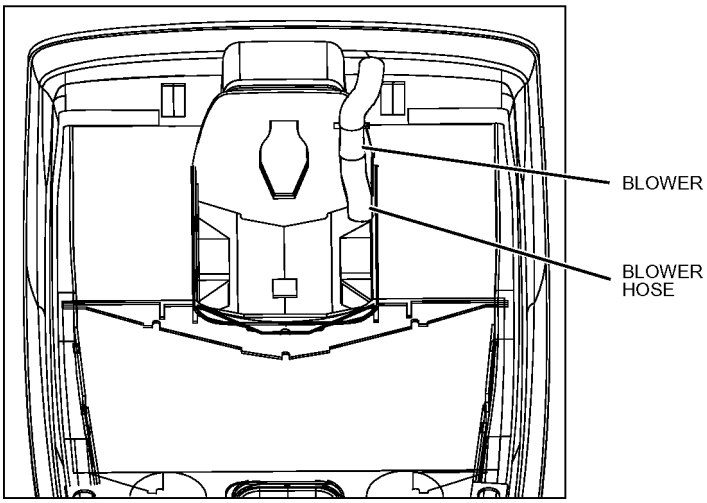

Fuel System

WARNING!

FIRE, EXPLOSION AND OPEN FLAME HAZARD!

- **It is very important that the fuel system be inspected thoroughly the first time it is filled and at each subsequent filling.**
- **The fueling instructions in the *Sport Boat Owner's Manual* and the fuel recommendations in the engine operation manual *must* be followed.**

CAUTION

Avoid the storage or handling of gear near the fuel lines, fittings and tank.

NOTICE

Carefully read the fuel section of both the *Sport Boat Owner's Manual* and the engine operation manual, paying special attention to the subject of *fuel recommendations*.

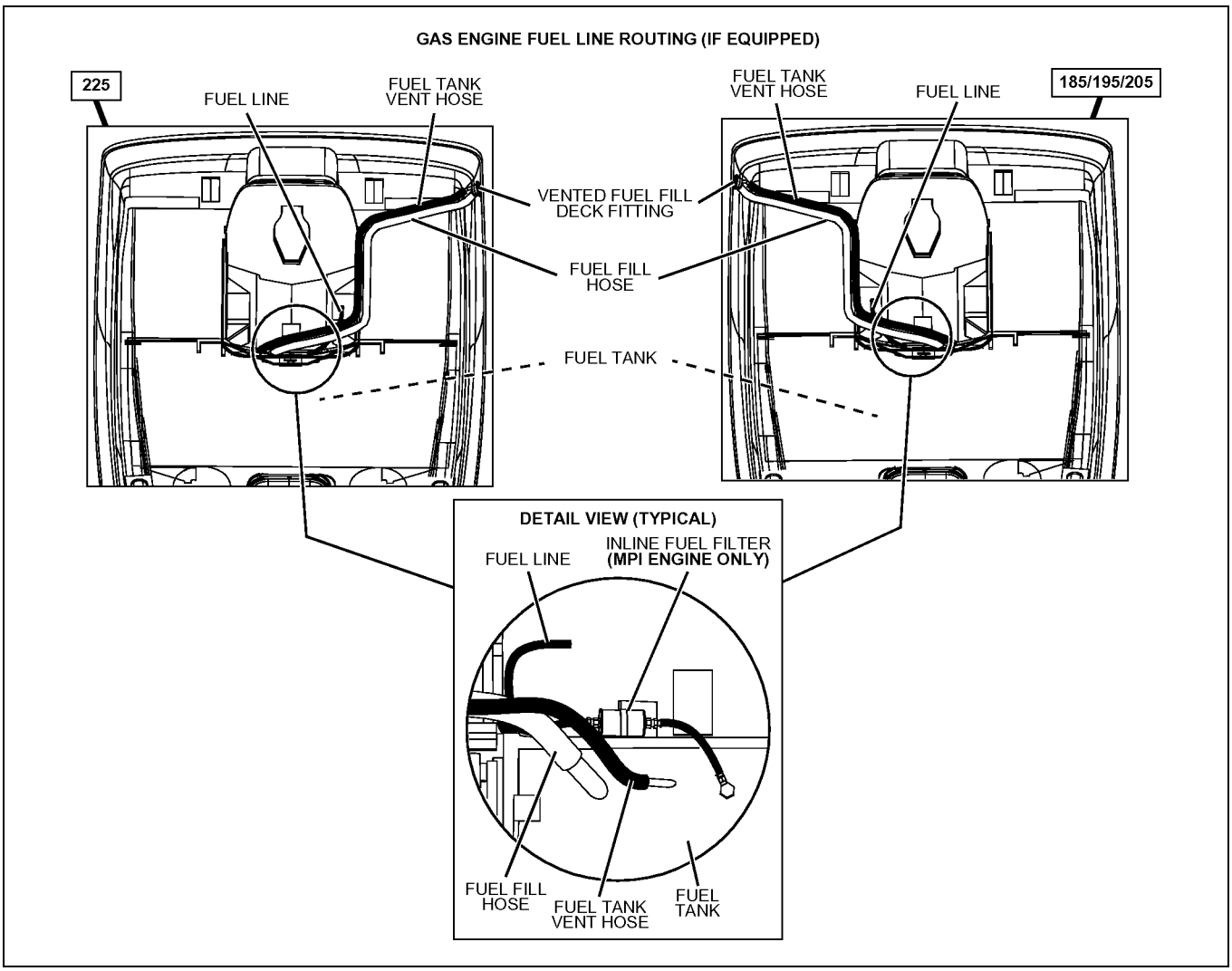

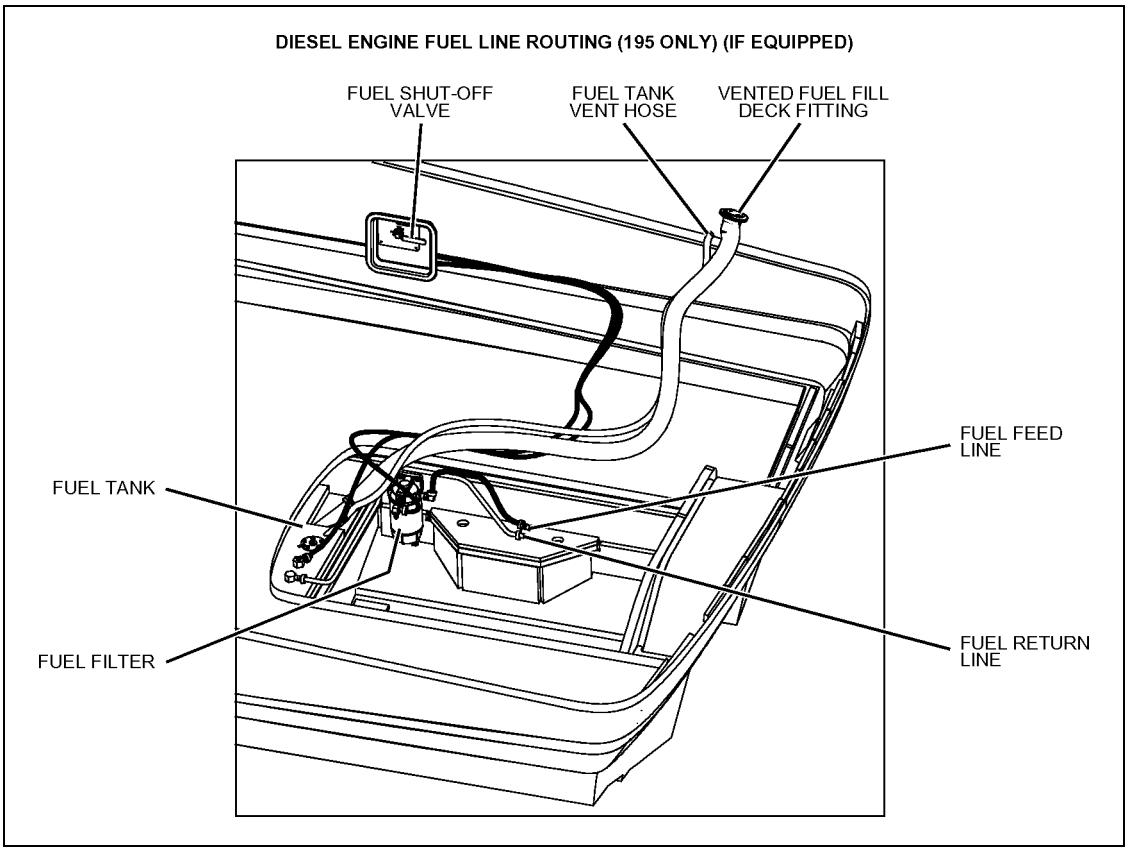

Fuel Fill & Vent

- The fuel fill/vent fitting is marked "Gas" or "Diesel".
- If you have problems filling the fuel tank, see if the fuel fill hose or fuel tank vent hose is kinked or collapsed.
- If there are no visible signs of a problem, contact your local dealer.

Fuel Filters

- The fuel pickup tube, located inside the fuel tank, is equipped with a fine mesh screen filter.
- If your boat features an MPI engine, there is an inline fuel filter on the fuel line.
- In addition, when supplied by the engine manufacturer, a fuel filter is installed on the engine.
- Periodically replace the fuel filters to make sure they remain clean and free of debris.
- Talk to your selling dealer or local marina about fuel additives that help prevent fungus or other buildup in your gas fuel tank.

Anti-siphon Valve

NOTICE

- **If an engine running problem is diagnosed as fuel starvation, check the anti-siphon valve.**
- **If the valve is stuck or clogged, change or replace it while the engine is *shut down*.**
- ***NEVER* run the engine with the anti-siphon valve removed, except in an emergency.**

- The anti-siphon valve is a vital fuel system part.
- If the fuel line ruptures, this valve will prevent the fuel from siphoning from the tank.
- The valve is located on the fuel tank, where the fuel feed line attaches to the tank.
- The valve is spring loaded and is opened by fuel pump vacuum.

Fuel Filter/Water Separator (Diesel Engine Only)

NOTICE

- **The frequency of water draining or element replacement is determined by the contamination level in the fuel.**
- **Inspect the collection bowls for water daily.**
- **Replace the elements at least once a year, or when a loss of power is noticed, whichever comes first.**

- The fuel feed line features a fuel filter/water separator.
- Service instructions for the fuel filter/water separator is provided on the filter.

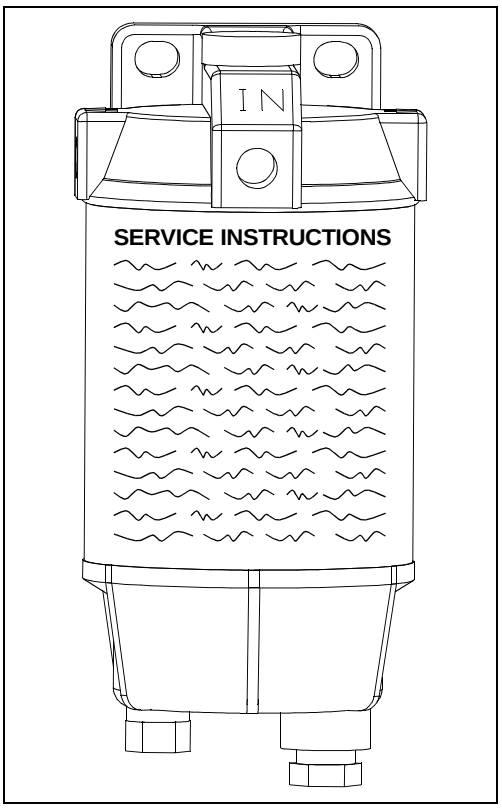

Quick Oil Drain System

The quick oil drain hose assembly was attached to the engine oil pan at the factory. However, some minor assembly is still needed ***before*** you can use this system.

NOTE: This is not the only method for changing your oil. Your selling dealer can recommend other methods.

How to install the quick oil drain system:

1. Unscrew the factory installed garboard drain plug from the garboard drain (A). Keep the factory garboard drain plug on the boat as a spare.
2. Unclip the quick oil drain assembly from the wire loop (B) on the engine.
3. Un-clip the draw cord section (C) from the draw cord section (D).
4. Thread the draw cord section (D), the oil drain plug (E), and the oil drain hose (F) through the garboard drain (A).
5. **Adjust the hose stop clamp (G) so that no more than 12 inches of hose, including the oil drain plug, can extend out of the garboard drain (A).**
6. Re-clip the draw cord section (C) to the draw cord section (D).
7. Push the oil drain hose, oil drain plug, and both sections of the draw cords through the garboard drain and into the bilge area.
8. Screw the oil drain garboard drain plug (H) into the garboard drain (A) and tighten firmly.

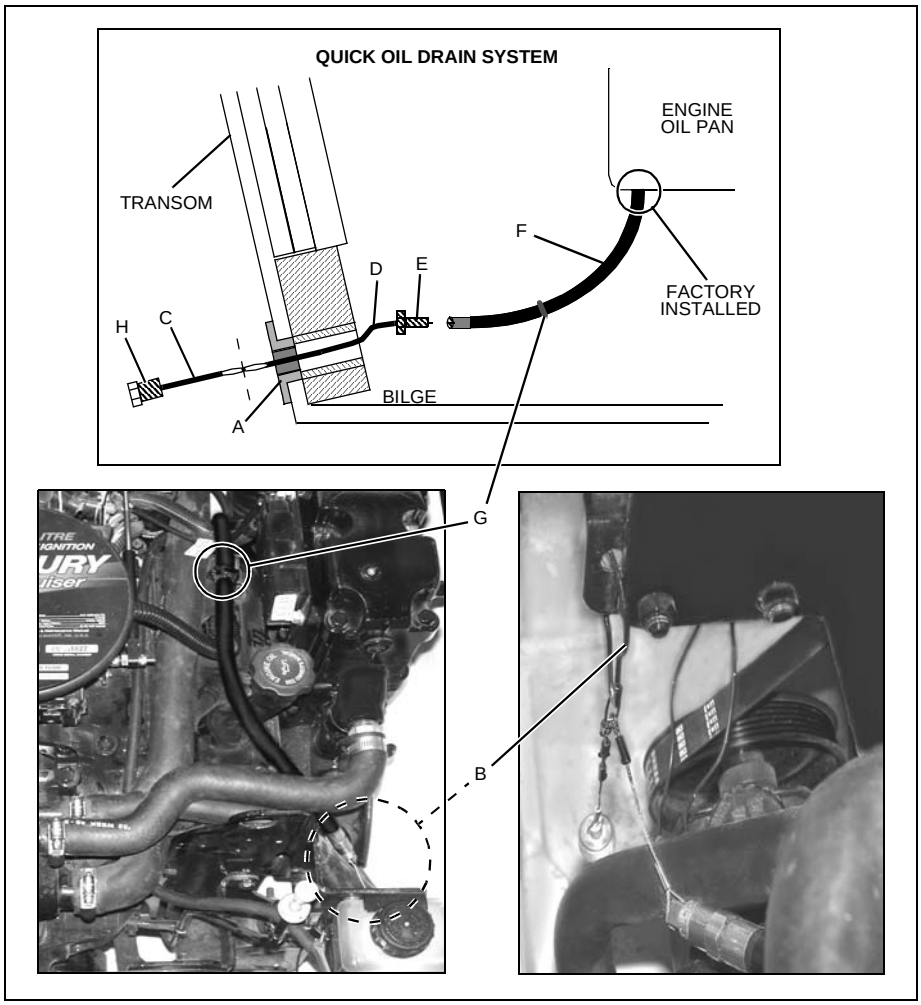

To drain the engine oil:

1. Remove the boat from the water.
2. Unscrew the garboard drain plug.
3. Pull the draw cord until the oil drain plug and the oil drain hose slide out of the garboard drain.
4. Place the end of the oil drain hose into a suitable container.
5. Unscrew the oil drain plug and drain the engine oil.
6. Replace the oil drain plug.
7. Push the drain hose back into the bilge.
8. Replace the garboard drain plug and tighten firmly.

***Always* dispose of waste oil in accordance with local regulations.**

Chapter 5: Controls & Gauges

Steering

- Your boat features a power assisted* rack-and-pinion steering system.
- For information about the 'power assist fluid reservoir', refer to the engine operation and maintenance manual.
- Boat steering is ***not*** self-centering.
- Refer to the engine manual for more steering system details.

*3.0L engines feature mechanical rack-and-pinion steering.

Shift/Throttle Lever

WARNING!

LOSS OF CONTROL HAZARD!

Improper maintenance of shift/throttle hardware may cause a sudden loss of control!

- Read ***all*** of the information about the shift/throttle in the *Sport Boat Owner's Manual*.
- Also, read the shifter/throttle manual and engine manual.

Power Trim and Tilt

- The stern drive on your boat is equipped with power trim and tilt.
- Trim and tilt instructions are provided in the engine operation manual and the shifter/throttle manual.

Gauges

Cleaning Gauges

⚠ CAUTION

PRODUCT or PROPERTY DAMAGE HAZARD!

- **Use only mild soap and water to clean the gauge lenses and bezels.**
- **Use of other cleaners, including common window cleaning solutions, may cause the lenses to crack.**
- **Lenses cracked in this manner will *NOT* be covered by our warranty.**

Gauge Fogging

- Moisture may occasionally find its way into the gauges causing lens fogging.
- Turning ***On*** the gauge lights will help dry the lenses.
- Fogging will not harm the gauges.

Radio Transmission Interference

VHF or other radio transmissions may cause brief erratic readings on the tachometer. This will ***not*** damage the tachometer gauge or affect its accuracy when not transmitting.

Fuel Gauge

It is normal for the pointer on your fuel gauge to bounce as fuel sloshes back and forth in the fuel tank.

Chapter 6: Plumbing

Bilge Pump

NOTICE

Discharge of oil, oil waste or fuel into navigable waters is prohibited by law. Violators are subject to legal action by the local authorities.

- Your boat is equipped with a bilge pump for pumping water out of the bilge.
- The 185, 195 & 205 bilge pumps are controlled by a switch at the helm.
- On the 225 the bilge pump is controlled by a float switch (auto-float switch) *and* a switch at the helm.

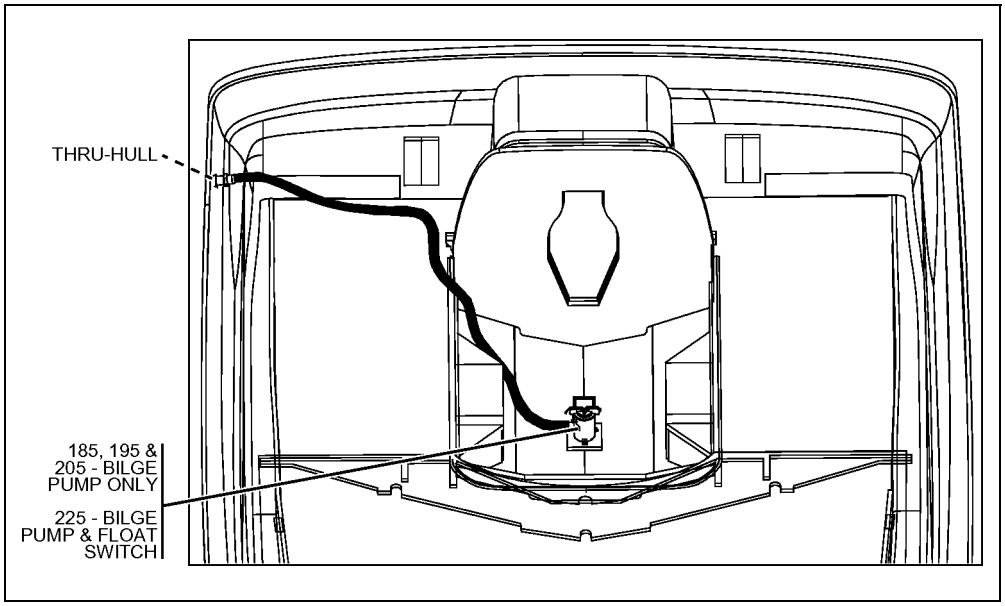

Bilge Pump Testing

- The bilge pump is vital to the safety of your boat.
- Test the bilge pump often to make sure it is working properly.

To test each bilge pump:

1. Turn ***On*** the bilge pump switch at the helm.
2. Make sure that water in the bilge is pumped overboard.

- If there is water in the bilge and the pump motor is running, but *not* pumping, inspect the discharge hose for a kink or collapsed area. If the discharge hose looks okay, check the bilge pump housing for clogging debris (see below).

Checking for clogging debris:

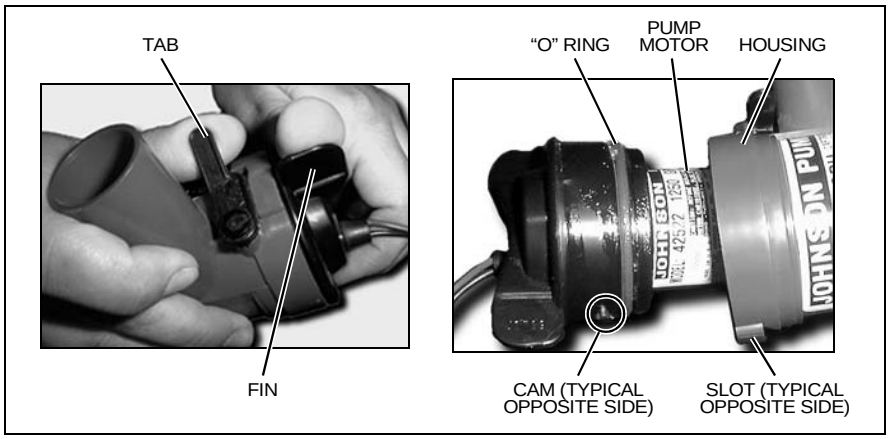

1. Remove the pump motor from the housing:
   a. Lift the tab while rotating the fins counter-clockwise.
   b. Lift out the pump motor.
   c. Clear the housing of debris.
2. Reinstall the pump motor:
   a. Make sure the "O" ring is properly seated.
   b. Coat the "O" ring with a light film of vegetable or mineral oil.
   c. Align the cams on either side of the pump motor with the slots on the housing.
   d. Press the pump motor into the housing while twisting clockwise.
3. Check the reinstallation by trying to twist the fins counter-clockwise *without* lifting the tab; the pump motor should stay in place.

Autofloat Switch (225 Only)

- The automatic bilge pump uses a float (autofloat) switch to automatically turn ***On*** the pump whenever water rises to a preset level in the bilge.
- The autofloat switch is normally mounted next to the bilge pump it controls.
- The autofloat switch should be tested often as follows.

Autofloat testing:

1. Lift the float switch test button ***up*** to turn ***On*** the bilge pump.
   - If the pump does ***not*** turn ***On***, check the fuse on the fuse block.
   - If the fuse is good but the switch still doesn't work, it may mean the switch is bad or possibly the battery is low.
2. After testing, push the test button all the way ***down*** to return the float switch to auto mode.

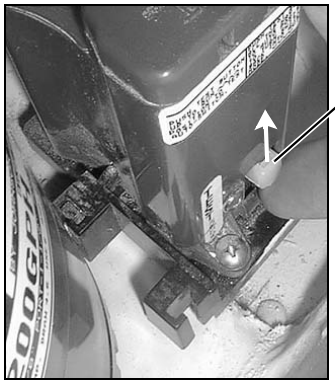

FLOAT SWITCH TESTING

FLOAT SWITCH TEST BUTTON

LIFT SWITCH UP
BILGE PUMP SHOULD TURN ON

PUSH SWITCH DOWN
BILGE PUMP SHOULD TURN OFF

⚠ CAUTION!

When the test is completed on the float switch, you *MUST* push the test button *all the way down* to return the switch to auto mode!

Livewell System (185 Only) (If Equipped)

WARNING!

FLOODING and SWAMPING HAZARD!

- ***NEVER* leave your boat unattended while the livewell system is running.**
- **Any leak or break in this system may allow large amounts of water to flood the bilge, which could swamp the battery(s), and even sink your boat.**

CAUTION

SYSTEM DAMAGE HAZARD!

***BEFORE* turning *On* the livewell system, make sure the intake seacock is *Open*.**

Filling & Using the Livewell

1. Open the intake seacock.
2. Push the livewell switch to the fill position (for the location of the livewell switch see the *Component Locations* section in *Chapter 2* of this *supplement*).

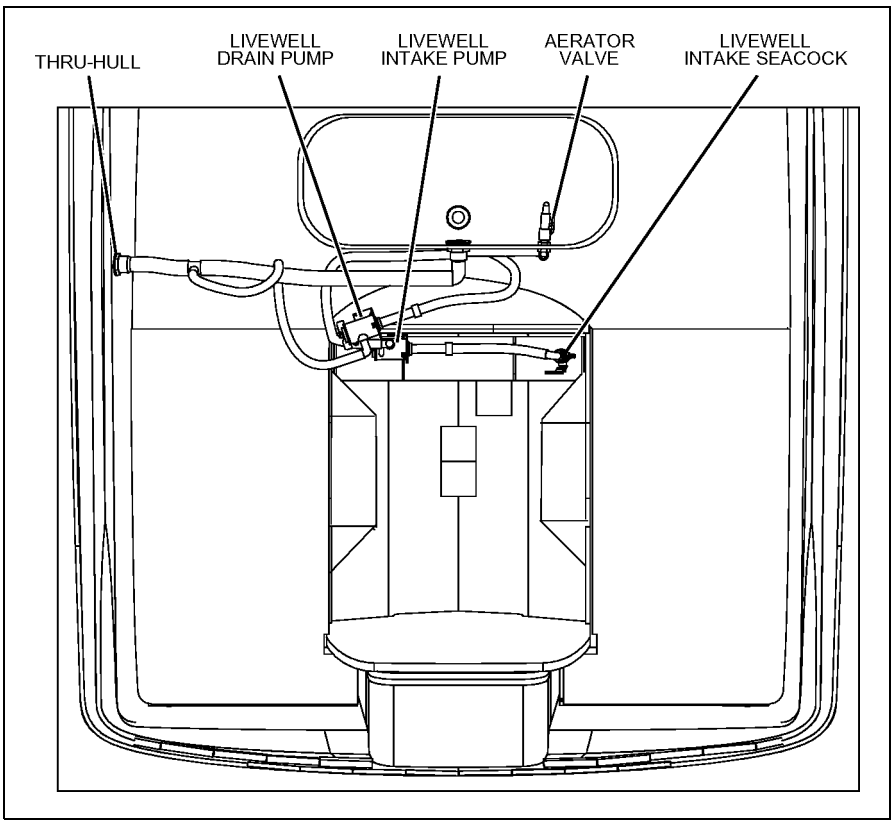

Troubleshooting

If you followed the instructions in steps 1 and 2 above, but water does ***not*** pump into the tank, possible causes are:

- A hose is collapsed or there is clogging debris in the system.
- The livewell fuse is blown.

Draining the Livewell

1. Close the intake seacock.
2. Pull the livewell switch to the drain position.

Aeration Tips

The level of aeration is controlled by the aerator control valve.

- In clean open water little or no aeration may be needed.
- In brackish back waters a higher level of aeration may be needed.

Freshwater System (225 Only) (If Equipped)

WARNING!

- ***Only*** **use safe drinking (potable) water in your boat's freshwater system.**
- ***Only*** **use an FDA approved, white 'drinking water safe' hose to fill the freshwater tank.**
- ***NEVER*** **use a common garden hose for drinking water.**

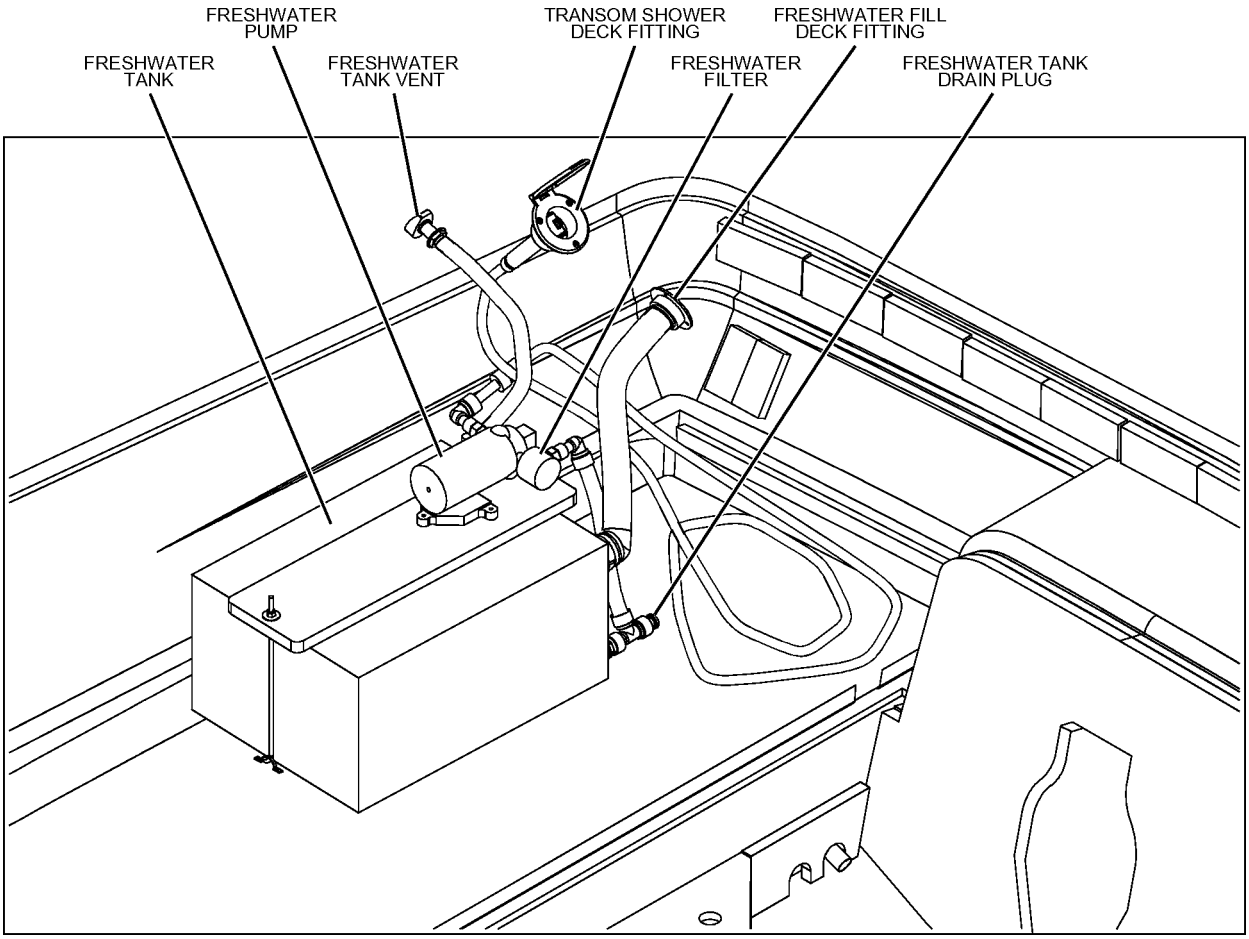

- Read the *Freshwater System* section in the *Sport Boat Owner's Manual*.
- Your boat is equipped with a pressure type (demand) freshwater (potable) system.
- Pressurize the system by turning ***On*** the freshwater pump switch.
- See the *Locations* section of this *Supplement* for the location of the freshwater pump switch.
- Since the freshwater pump requires DC power, the battery switch ***must*** also be turned ***On*** for the pump to work.
- Turn ***Off*** the freshwater pump switch when the boat is ***not*** in use or when the freshwater tank is empty.
- Inspect and clean the freshwater filter often (located on the freshwater pump).
- If your boat is to be left unattended for a long period of time, pump the freshwater tank dry to prevent stored water from becoming stagnant and distasteful.
- If the freshwater system needs to be disinfected, ask your dealer about treatments available for your boat's system.

Freshwater System Winterization

⚠ CAUTION

WATER SYSTEM DAMAGE HAZARD!

***NEVER* blow compressed air through the water system when *all* of the faucets are *Closed*.**

1. Turn ***On*** the freshwater pump switch.
2. ***Open all*** of the faucets and showers and let the freshwater system drain completely.
3. Turn ***Off*** the freshwater pump switch.

All remaining water ***must*** be removed from the water lines. There are two ways to remove the remaining water from the lines:

- Compressed Air
- Gravity Draining

Compressed Air

You ***must*** have an air compressor with an air hose and an air nozzle.

1. Remove the water line from the outlet side of the freshwater pump (opposite side from filter).
2. ***Open*** the faucet that is furthest away from the freshwater pump.
3. Place the air nozzle against the end of the just removed water line and blow air through the system.
4. When water stops coming out of the ***Open*** faucet, stop the air and ***Close*** the faucet.
5. One at a time, repeat this process on ***all*** faucets and showers.

Gravity Draining

1. ***Open all*** faucets and showers.
2. Remove the drain plug from the tee fitting on the freshwater tank.
3. When the water has stopped draining from the freshwater tank, replace the drain plug.

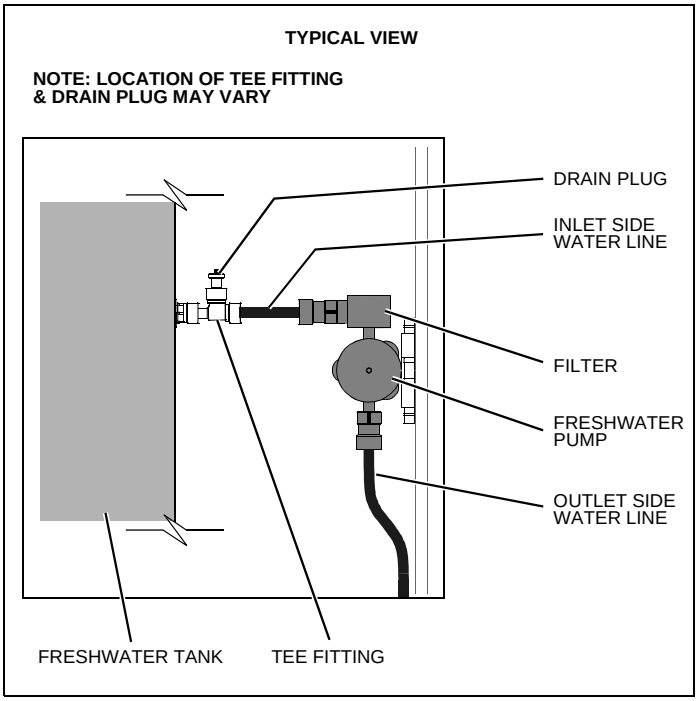

Transom Shower (If Equipped)

- Read the manufacturer's instructions ***before*** using the transom shower for the first time.
- The freshwater pump switch ***must*** be turned ***On before*** using the transom shower.

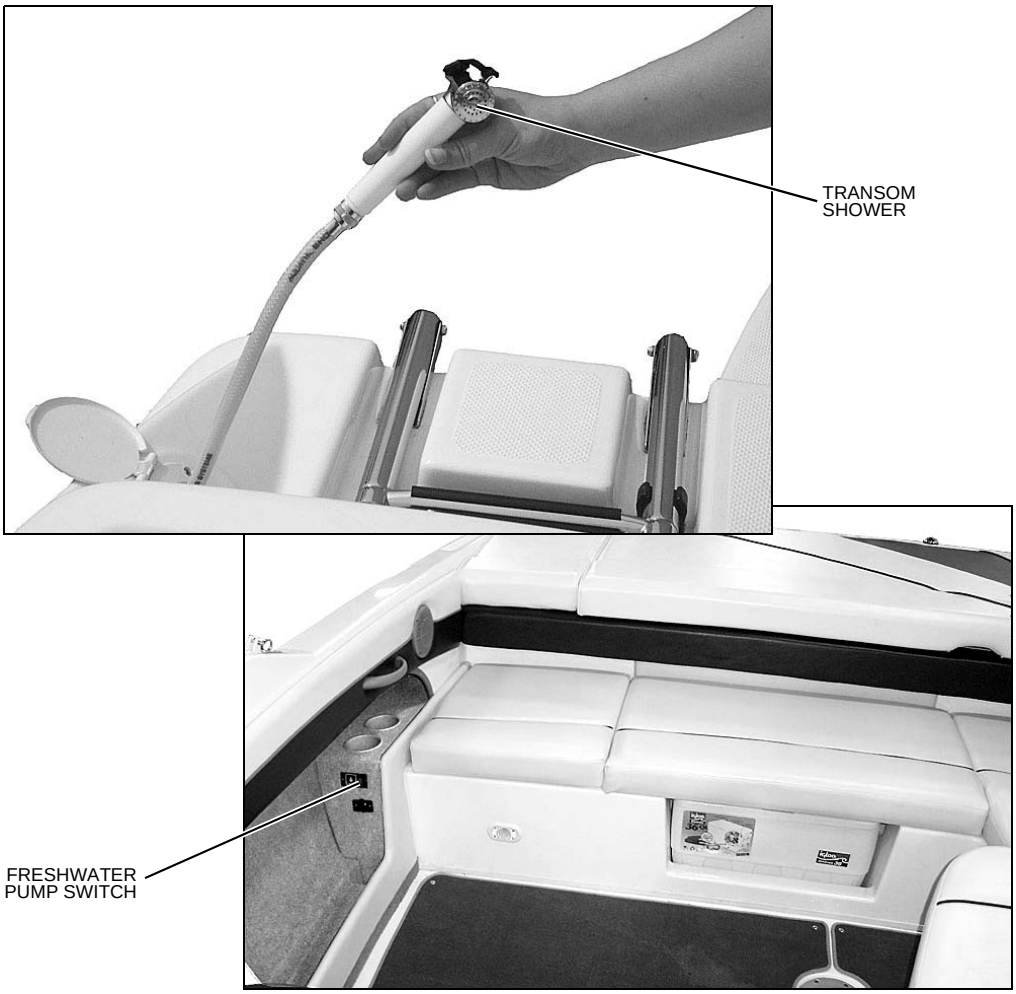

Drain Systems

Deck Drains

- Water on the deck is drained overboard through the deck drains.
- Keep the deck drains free of debris.

Chapter 7: Deck Equipment

Cleats and Tow Eyes

⚠ WARNING!

PERSONAL INJURY and /or PRODUCT or PROPERTY DAMAGE HAZARD!

***NEVER* lift the boat using the bow and stern eyes or the cleats.**

Carefully read the section on towing in the *Sport Boat Owner's Manual* ***before***:

- Towing anything behind the boat.
- Being towed by another vessel.

Bow Mount Trolling Motor (185 Only) (If Equipped)

Read the manufacturer's instruction manual ***before*** using the trolling motor.

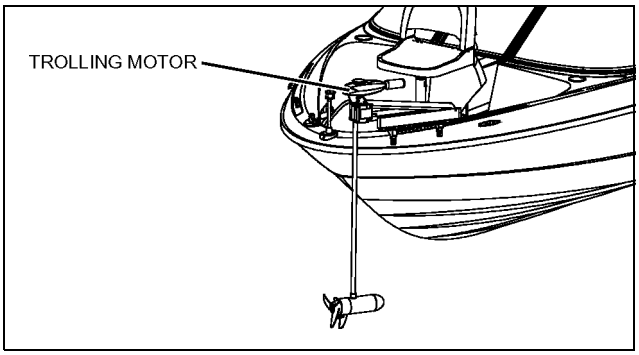

Ski Tow Ring

⚠ WARNING!

PERSONAL INJURY and /or PRODUCT or PROPERTY DAMAGE HAZARD!

Failure to follow these guidelines can result in injury or death:

- **Only tow water skis, wakeboards, or recreational towables.**
- **Do *NOT* tow parasails, kites, or other boats.**
- **Do *NOT* tow more than two persons at one time.**
- **Use caution with skier in tow as tow rope may snap back into cockpit when released.**

Attach tow rope as shown in the photo.

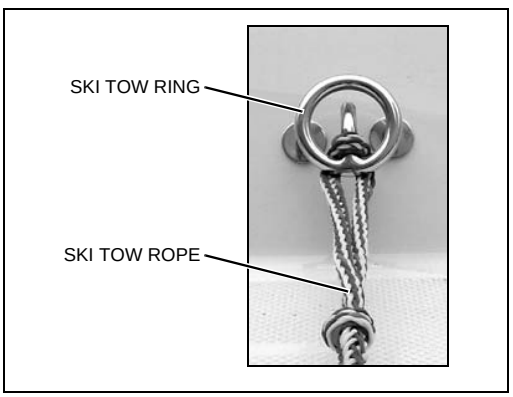

Ski-Tow Tower (If Equipped)

WARNING!

PERSONAL INJURY and /or PRODUCT or PROPERTY DAMAGE HAZARD!

Failure to follow these guidelines can result in injury or death:

- **Read *all* warning labels on ski-tow tower.**
- ***Before* each use, make sure all bolts are in place and tight.**
- ***Only* tow water skis, wakeboards, or recreational towables.**
- **Do *NOT* exceed the following *maximum* tow weights:**
  185 & 195 models - 400 pounds
  205 & 225 models - 600 pounds
- **Do *NOT* tow parasails, kites, or other boats.**
- **Do *NOT* tow more than two persons at one time.**
- **Do *NOT* climb on, sit on, stand on, jump off or dive off tower.**
- ***Never* allow passengers to sit behind tow rope attachment point.**
- **Use caution with skier in tow as tow rope may snap back into cockpit when released.**
- ***Never* allow loose tow rope ends to dangle off tower.**
- **When tower is up, watch for low obstacles such as tree limbs, bridges, or power lines.**

Attaching the Ski-Tow Rope

1. Place the ski-tow rope loop (A) over the ski-tow pylon (B).

2. Put a twist in the ski-tow rope loop (A) and place over the ski-tow pylon (B) again.

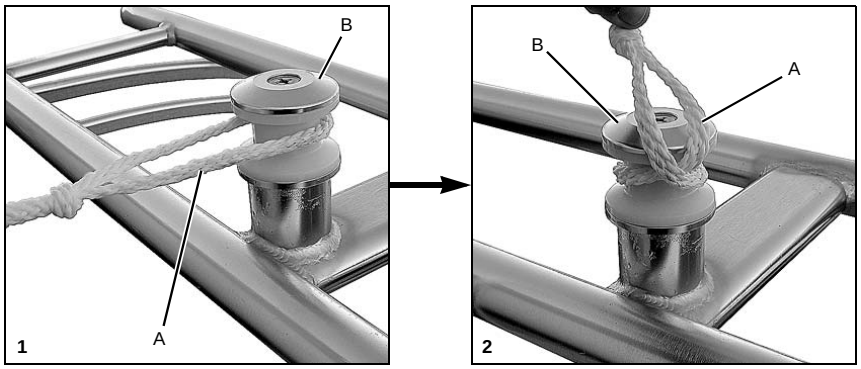

3. Pull ski-tow rope to tighten.

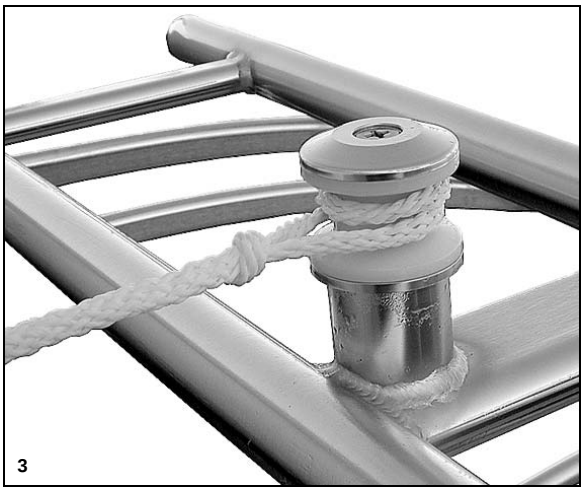

Folding the Ski-Tow Tower

⚠ WARNING!

PERSONAL INJURY and /or PRODUCT or PROPERTY DAMAGE HAZARD!

- **Folding or unfolding the ski-tow tower is a two person task.**
- ***Before* each use of the folding ski-tow tower, make sure *all* four lock-down bolts are tightened firmly.**
- **Read *all* warning labels on the ski-tow tower.**

To fold the ski-tow tower into the storage position:

1. Remove the lower lock-down bolt (A) on each side of the tower.

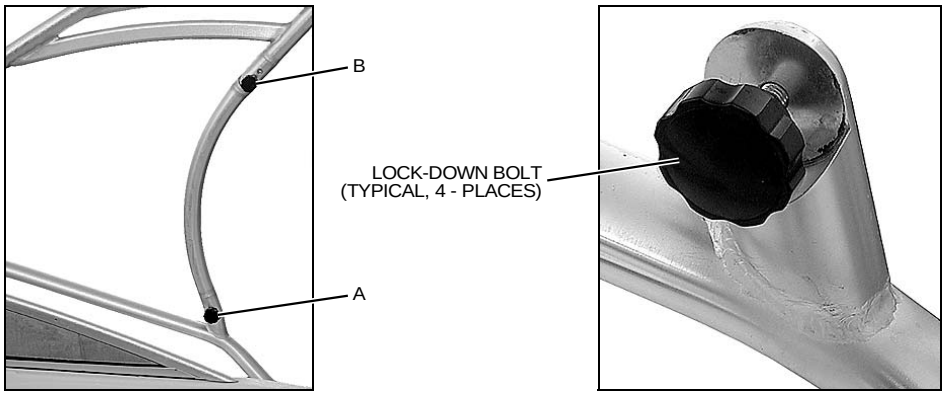

2. Carefully fold the tower forward.
3. Replace the lower lock-down bolts (A).
4. Remove the upper lock-down bolts (B).

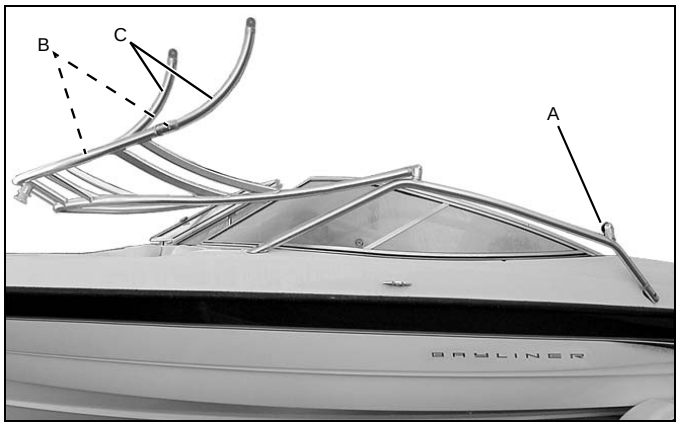

5. Lower the support legs (C).
6. Replace the upper lock-down bolts (B).

To return the tower to the towing position, perform the above steps in reverse order.

Canvas (If Equipped)

⚠ CAUTION

PRODUCT or PROPERTY DAMAGE HAZARD!

Take down and securely stow the canvas top or bimini top, side curtains, and slant back cover *before* transporting your boat by road.

NOTICE

Two people are needed to do the tasks listed below and on the following pages in this section.

Convertible Top

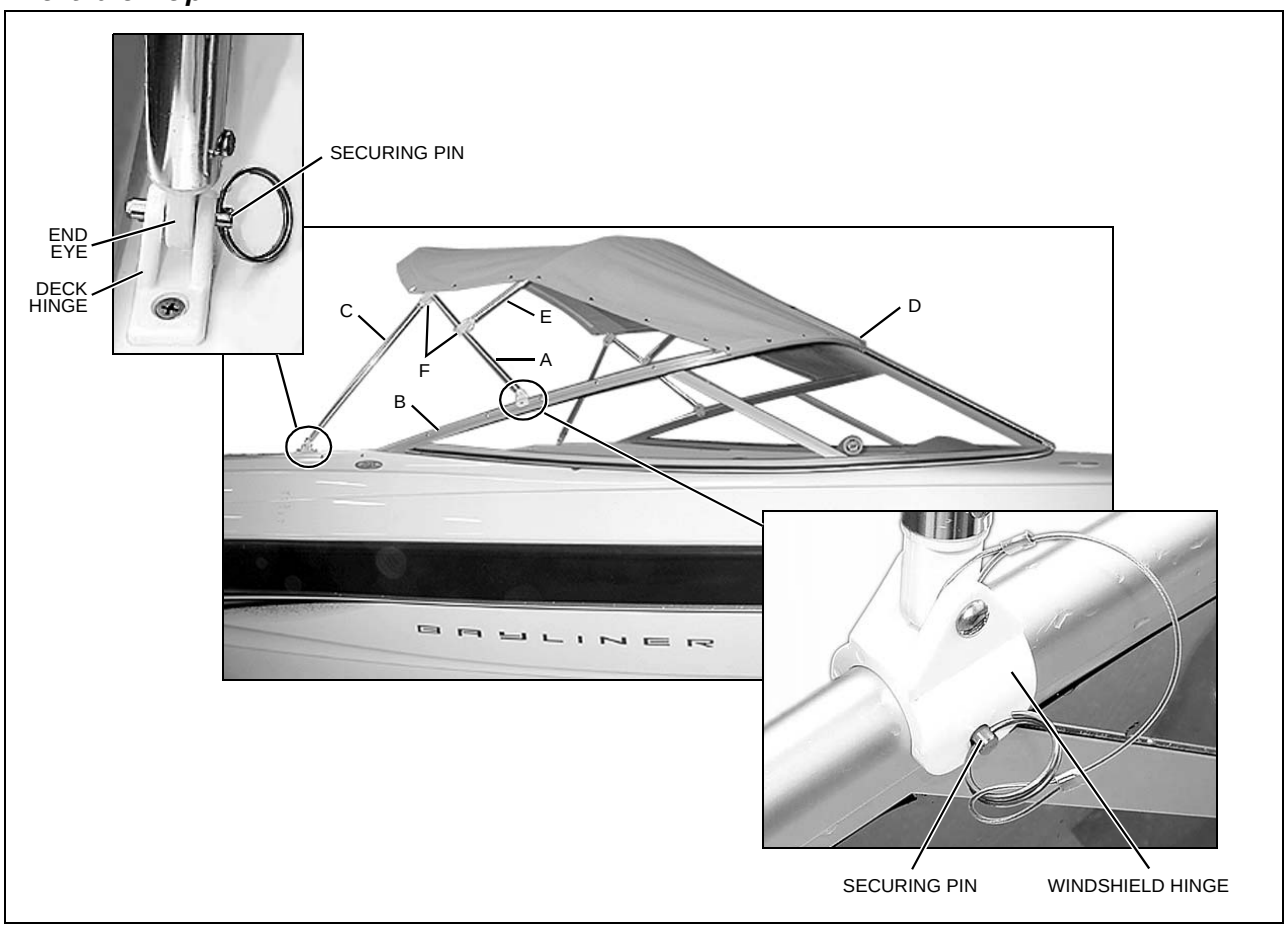

1. Unzip, remove, and stow the storage boot.
2. Slide the windshield hinges of the main bow (A) over the pre-drilled hole on each side windshield frame (B) and secure with the pins.
3. Insert the end eyes of the aft braces (C) into the deck hinges and secure them with the pins.
4. Unfold the canvas top and snap the front edge of the top (D) to the windshield frame.
5. Align the secondary bow (E) with the center seam of the canvas by loosening or tightening the top straps.
6. No adjustments to the jaw slides (F) should be needed as they are preset during manufacturing. Before attempting to adjust the jaw slide positions, obtain the correct measurements from your selling dealer.
7. If additional canvas (i.e. side curtains or slant back cover) is installed, the canvas top may need readjustment to align the snaps on the canvas with the snaps on the boat.

Side Curtains (If Equipped)

1. Snap the forward corner (A) of the side curtain to the windshield frame.
2. Working your way aft, alternately snap the top snaps to the canvas top and the bottom snaps to the windshield frame and deck.
3. Insert the side curtain stud (B) into the socket on the canvas top.

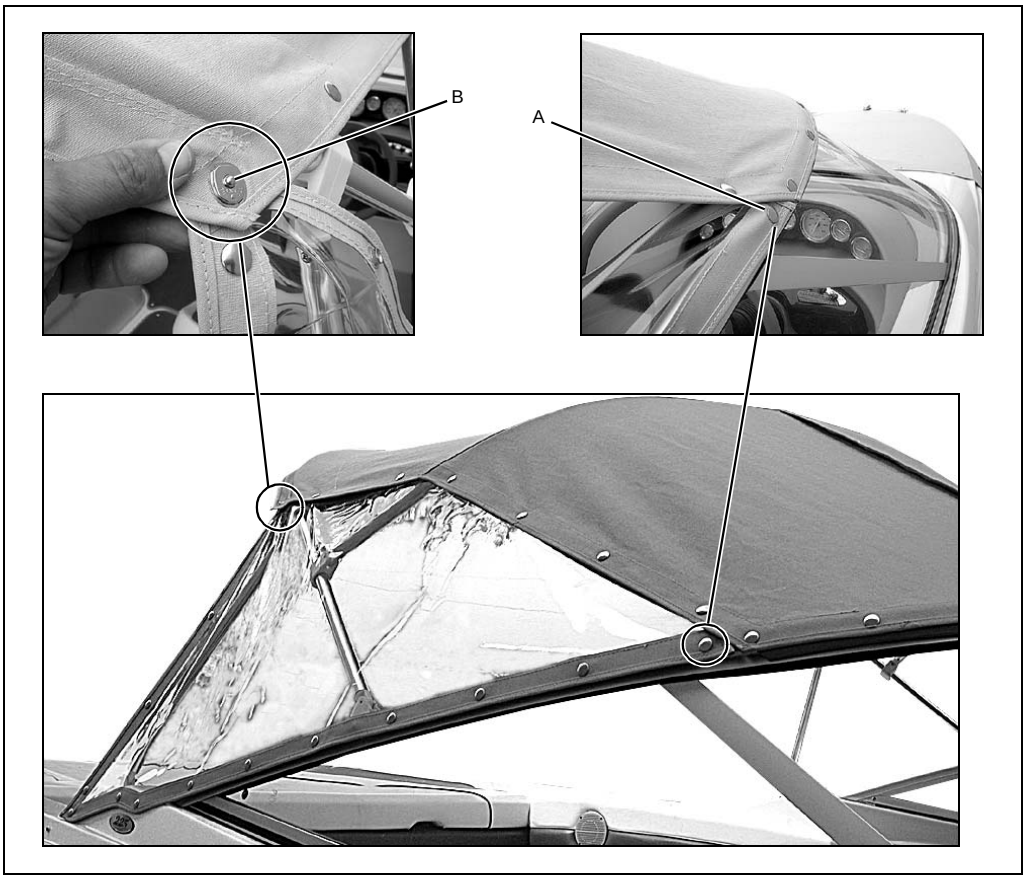

185 Bimini Top (If Equipped)

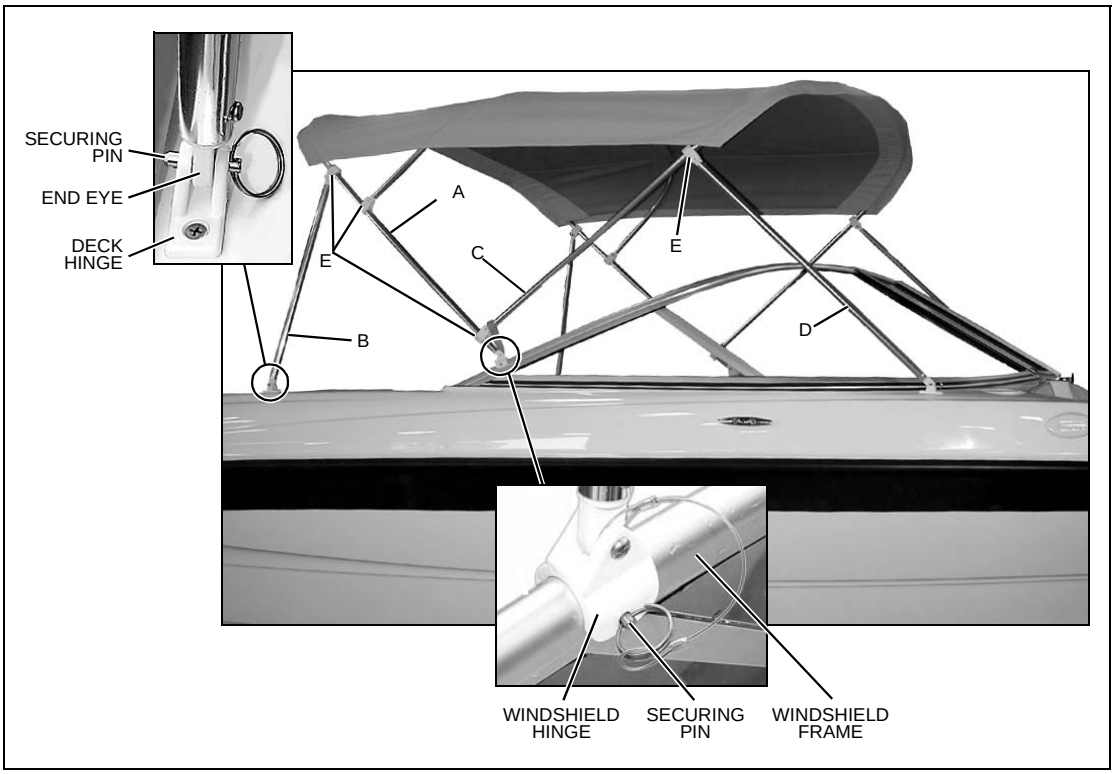

1. Slide the windshield hinges of the main bow (A) over the predrilled holes in the windshield frames and secure the pins.
2. Insert the end eyes of the aft braces (B) into the deck hinges and secure them with the pins.
3. Pull the secondary bow (C) forward and insert the end eyes of the forward braces (D) into the deck hinges and secure them with the pins.
4. No adjustments to the jaw slides (E) should be needed as they are preset during manufacturing. Before attempting to adjust the jaw slide positions, obtain the correct measurements from your selling dealer.

205/225 Bimini Top (If Equipped)

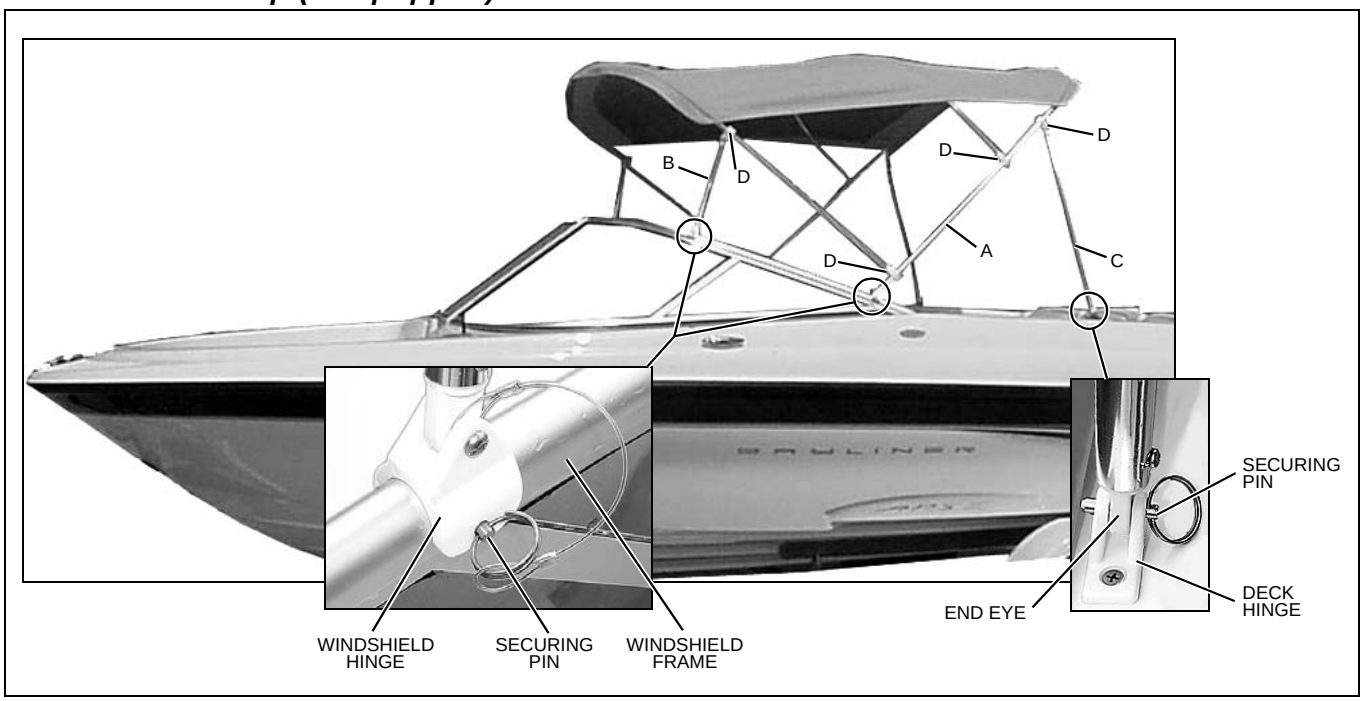

1. Slide the windshield hinges of the main bow (A) over the aft pre-drilled holes in the windshield frames and secure with the pins.
2. Unfold the canvas top and slide the swivel ends of the forward legs (B) over the forward pre-drilled holes in the windshield frames and secure with the pins.
3. Slide the end eyes of the aft legs (C) into the deck hinges and insert the pins.
4. No adjustments to the jaw slides (D) should need to be made as they are preset during manufacturing. Before attempting to adjust the jaw slide positions, obtain the correct measurements from your selling dealer.

Bow Cover (If Equipped)

1. Snap the two forward snaps (A) to the deck.
2. Snap the bow cover to the entire port side.

3. On the starboard side, only snap the forward half of the bow cover to the deck.
4. Insert the adjustable, center support pole (B) into both the bow cover and the table base (C).
5. Adjust the support pole so that it is just high enough to stay inserted in the bow cover.

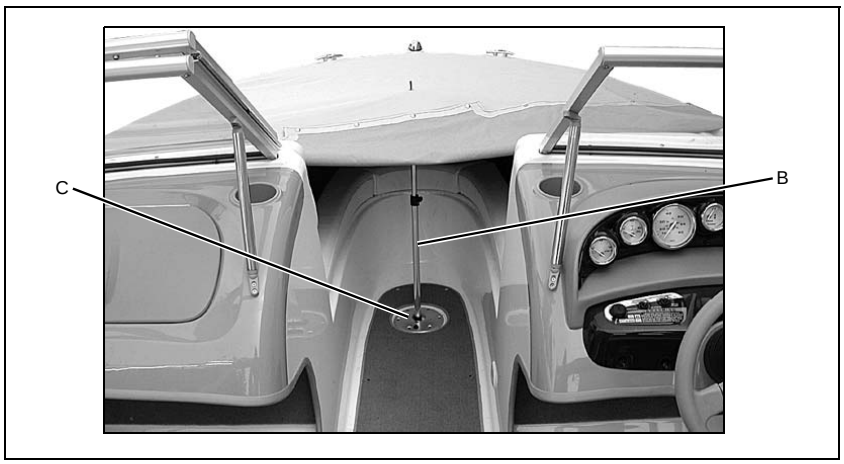

6. Snap the rest of the bow cover to the deck.
7. Adjust the support pole to take any slack out of the bow cover.

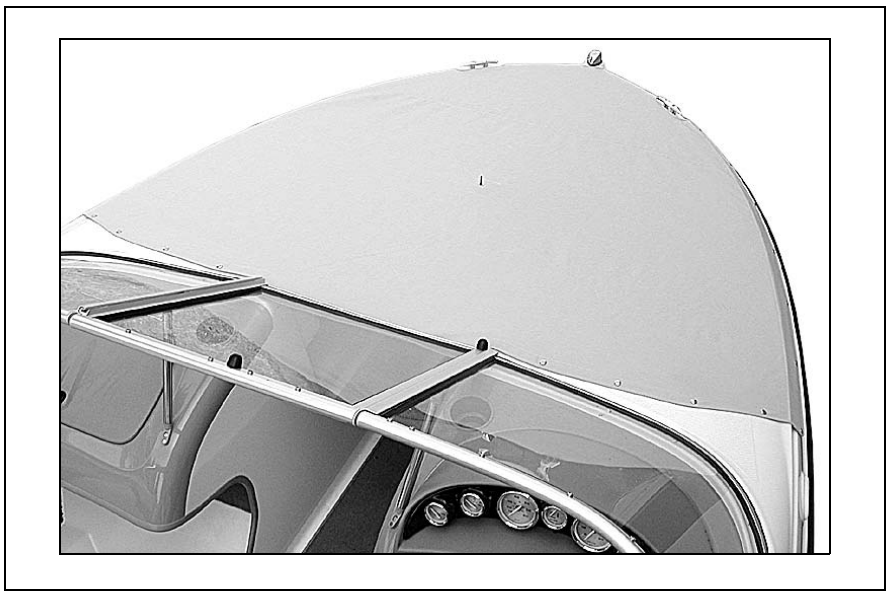

Canvas Care (see also, 'Clear Vinyl Care' on next page)

- After each use, especially in saltwater, rinse the canvas with cold freshwater.
- ***Before*** stowing, let the canvas air dry completely.
- The canvas can be rolled or folded for stowage.

Cleaning Canvas

⚠ CAUTION

***NEVER* use detergents when washing the canvas. Detergents can destroy the water repellency, and mildew/UV resistant finish of your canvas.**

Regularly clean the canvas to prevent dirt, pollen, and etc. from embedding in the fabric. Generally, it is easiest to wash the canvas while it is installed on the boat.

- Use a soft-bristled brush to remove all dust and loose dirt.

1. Hose down the canvas with freshwater.
2. Gently wash the canvas with a solution of lukewarm water (no more than 100 F) and non-detergent soap, such as Lux or Ivory Flakes.
3. Rinse thoroughly to remove the soap.
4. ***Before*** stowing, let the canvas dry completely.

Stubborn Stains

⚠ CAUTION

- **Soaking in bleach solutions may remove the waterproof finish of the fabric and may also decrease the life of the polyester thread used in the canvas.**
- **If necessary, a water repellent treatment should be re-applied to your canvas. Ask your dealer about the treatments available for your boat's canvas.**

Some stubborn stains may resist normal washing and you can try the following methods. However, these methods may remove the waterproof finish of the fabric and may also decrease the life of the polyester thread used in the canvas. Reapply a water repellent treatment as necessary.

Method 1

1. Add 1/8 cup (2 oz.) of **non-chlorine** bleach to one gallon of water and mix thoroughly.
2. Thoroughly wet the canvas and then gently scrub the stained area with the weak bleach solution.
3. Rinse with cold water to remove all of the solution.

Method 2

1. Add 1/2 cup (4 oz.) of **non-chlorine** bleach and 1/2 cup (4 oz.) Ivory Flakes to one gallon of water and mix thoroughly.
2. Soak the canvas in this solution for about 20 minutes.
3. Rinse with cold water to remove all of the solution.

Clear Vinyl Care

⚠ CAUTION

- ***NEVER* store the clear vinyl pieces wet, as this will cause a milky film to develop.**
- ***NEVER* fold or crease the clear vinyl pieces as cracking will occur.**
- **Clear vinyl is *not* intended for use when the boat is in storage or being moored.**
- **Clear vinyl *does not* hold up well against ultraviolet rays.**
- **Under direct sunlight conditions, do *NOT* let the clear vinyl touch the framework. The framework radiates heat and can burn the clear vinyl.**

- After each use, especially in saltwater, rinse the clear vinyl with cold freshwater.
- ***Before*** stowing, the clear vinyl must be completely dry. Air drying is best, but you can also carefully dry the vinyl with a chamois or soft cotton cloth.
- The clear vinyl can be rolled or laid out flat for stowage.
- ***Never*** fold or crease the clear vinyl parts as cracking will occur.

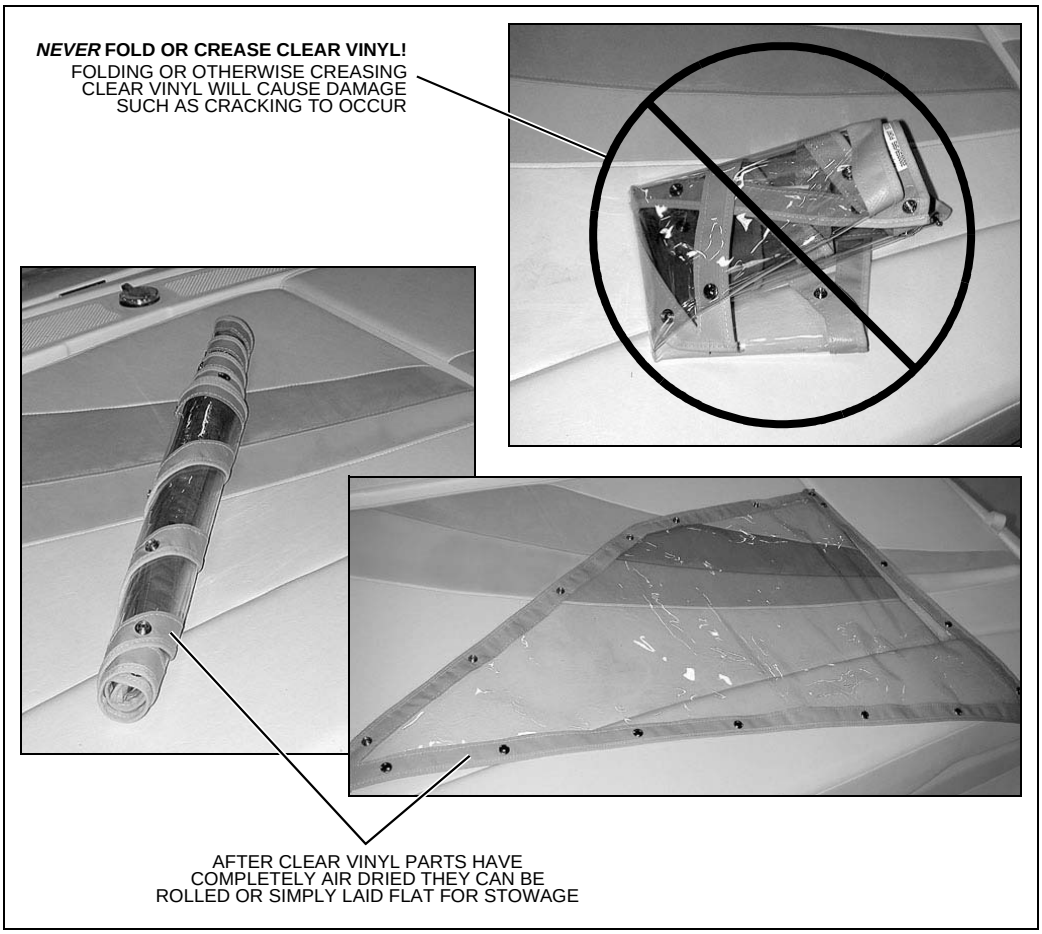

Cleaning Clear Vinyl

Regularly clean the clear vinyl to prevent dirt, pollen, and etc. from marring the surface. Generally, it is easiest to clean the clear vinyl while it is installed on the boat.

1. Hose down the clear vinyl with freshwater.
2. Using a soft cotton cloth **(paper towels are abrasive and should *never* be used on clear vinyl)**, gently wash the clear vinyl with soap and water.
3. Rinse thoroughly to remove the soap.
4. ***Before*** stowing, the clear vinyl must be completely dry. Air drying is best, but you can also carefully dry the vinyl with a chamois or soft cotton cloth.

- Ask your dealer about products available to keep the clear vinyl polished and looking new.

Chapter 8: Entertainment System

Audio Equipment

NOTICE

AM radio reception may be impaired anytime the engine is running.

Chapter 9: Convertible Seats, Beds, & Tables

WARNING!

FALLING and PRODUCT DAMAGE HAZARD!

***NEVER* allow anyone to step-on or stand-on a sleeper seat in the lounge position.**

Sleeper Seats (If Equipped - 185, 195 & 205 Only)

- The sleeper seats can be adjusted fore and aft in the upright, operating position.
- The seat bottoms adjust into backrests when the seats are in the lounge position.

Operating Positions

To slide the seat forward:

1. Lift the forward seat at point (A).
2. Push down on the forward seat at point (B) and pull the seat forward.
3. Lock the forward seat into the desired position by pushing down at point (A).
4. Lift the aft seat at point (C).
5. Push down on the aft seat at point (D) and push the seat forward until the aft seat back is flush against the forward seat back.
6. Lock the aft seat into position by pushing down at point (C).

To slide the seat aft, repeat the steps above, but start with the aft seat.

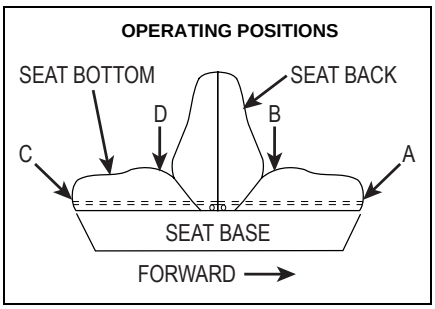

Lounge positions

To adjust into the flat lounge position:

1. Lift the forward seat at point (A).
2. Push down on the forward seat at point (B) and pull the seat forward until the seat back and bottom are flat.
3. Lift the aft seat at point (C).
4. Push down on the aft seat at point (D) and pull the seat aft until the seat back and bottom are flat.

To adjust into the chaise lounge position:

1. Lift up on the forward or aft seat bottom at point (A or C) and push the seat bottom down into the locked position.
2. To lower the seat bottom, lift the seat at point (A or C). Drop the seat bottom flat while holding the seat down at point (E).

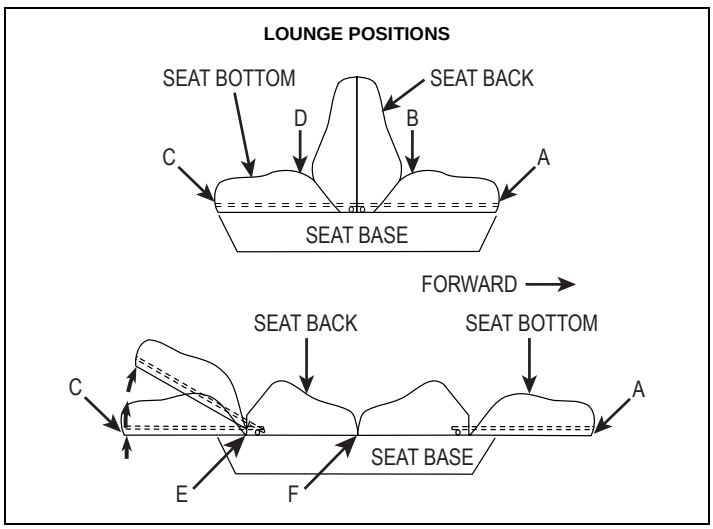

To return the seats to the operating position:

1. Lift the seat backs at point (F) and push down on the back edge of the seat bottom (B) and then seat bottom (D).
2. Push the seat bottoms towards the center of the seat until the seat backs are flush against each other and locked into place.

Jump Seat To Sunlounge Conversion (If Equipped - 185, 195 & 205 Only)

⚠ DANGER!

PERSONAL SAFETY HAZARD!

***NEVER* allow anyone to occupy the aft sunlounge cushions when the engine is running.**

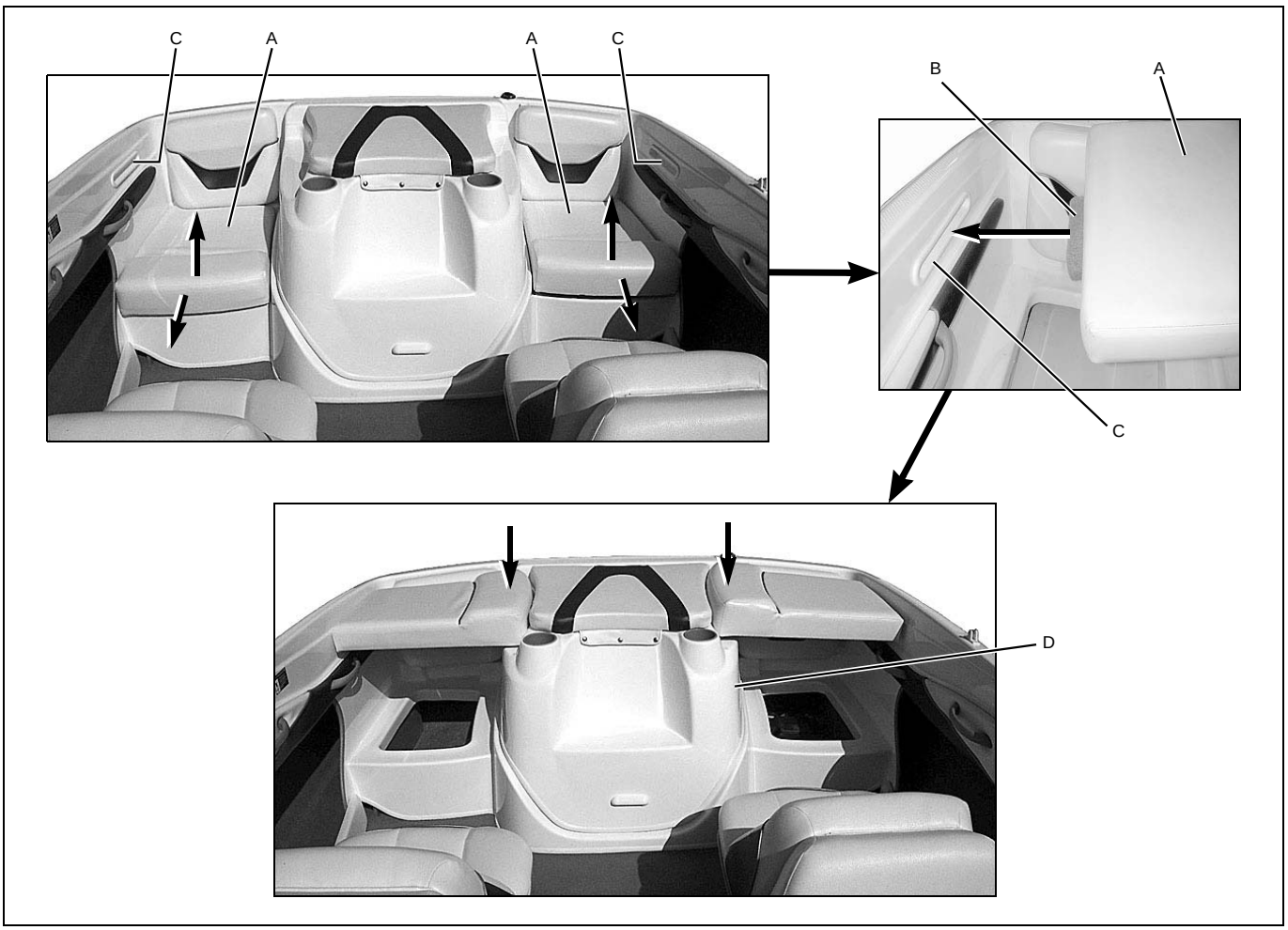

1. Remove the jump seats (A) by lifting and pulling on their forward edges.
2. Rotate each jump seat so that the lounge support tabs (B) face the support slots (C).
3. Slide the lounge support tabs into the support slots.
4. Press down firmly on the inboard side of each jump seat until they rest on the motorbox (D).

Passenger Seat to Sunlounge Conversion (225 Only)

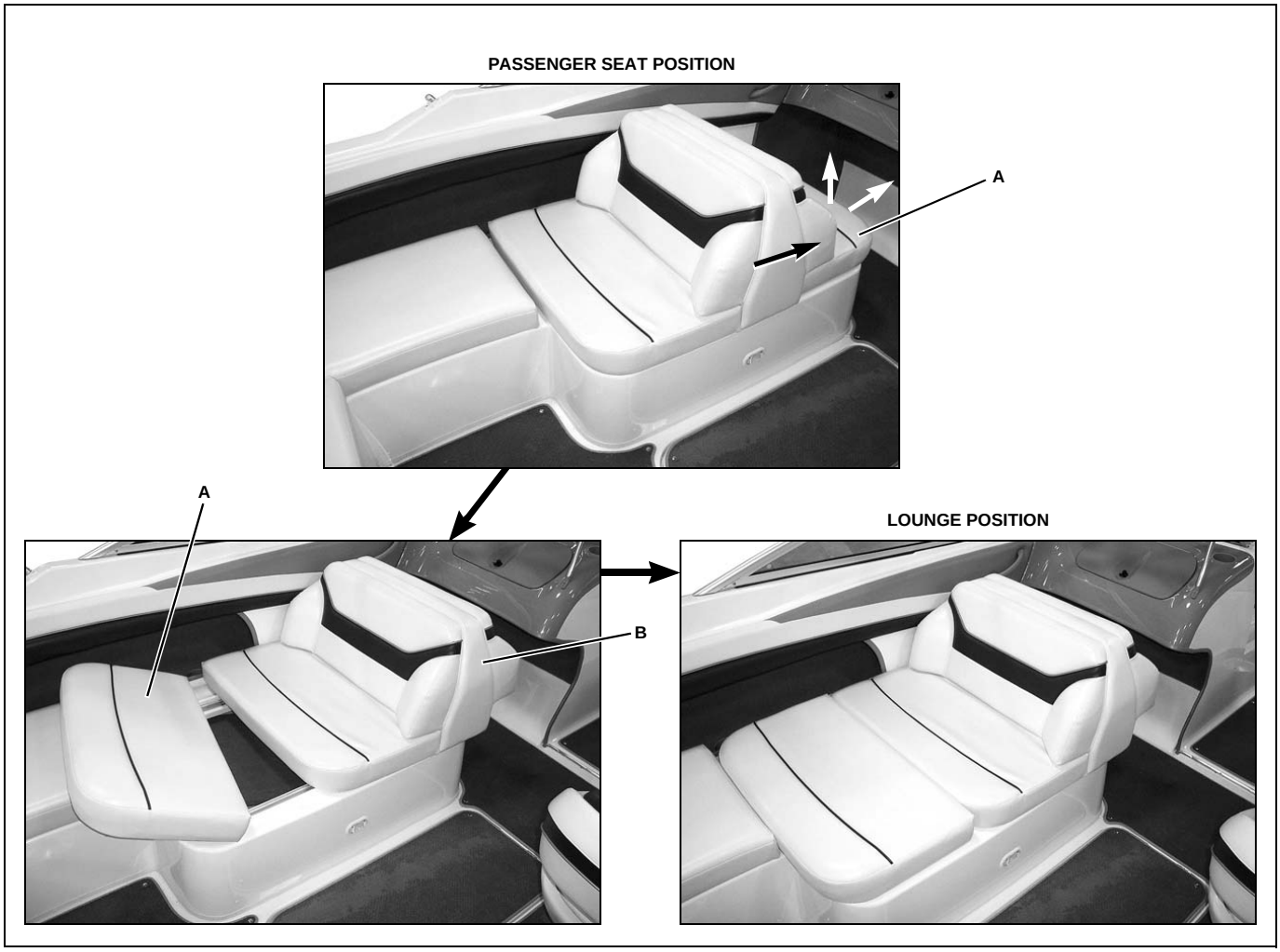

1. Remove the forward seat bottom (A) by lifting and pulling the forward edge.
2. Slide the seat backs (B) forward until they stop.
3. Use the seat bottom (A) to fill in the space.

Installing & Removing Table Leg (225 Only)

Installing the Table Leg

1. Place the threaded end into the base.
2. Twist the table leg clockwise until it locks in place.

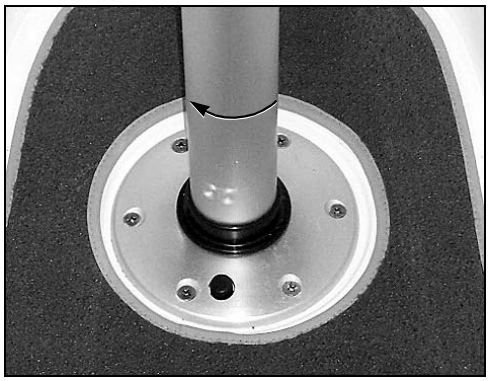

Removing the Table Leg

1. Press firmly on the black release button and twist the table leg counter-clockwise.

Table & Table Leg Stowage

When not in use the table and table leg can be stowed in the engine compartment.

Removable Fishing Seats (If Equipped)

⚠ DANGER!

FALLING and ROTATING PROPELLER HAZARD!

- ***NEVER* allow anyone to ride on parts of your boat *NOT* designed for such use.**
- **Sitting on the fishing seats while underway is especially hazardous and *WILL* cause personal *injury* or *death*.**

Remove and stow the fishing seats and pedestals in a safe and secure area ***before*** getting underway or trailering your boat.

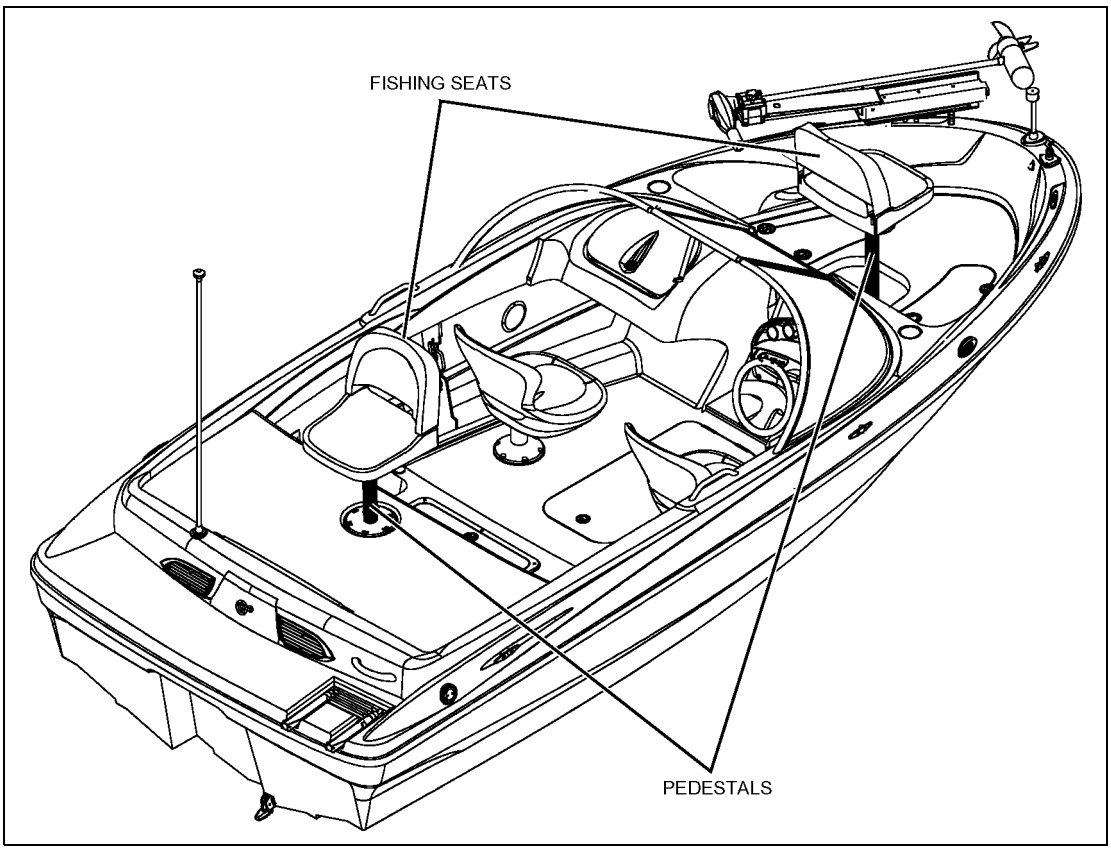

Chapter 10: Lights

Care and Maintenance

All of the lights installed on your boat are of top quality, but you should be aware that failure may periodically occur for a variety of reasons:

1. There may be a blown fuse - *replace the fuse*.
2. The bulb may be burned out - *carry spare bulbs for replacement*.
3. A wire may be damaged or may have come loose - *repair as required*.
4. The bulb base may be corroded - *clean the base and coat it with non-conductive electrical lubricant*.

Navigation Lights

⚠ CAUTION

Avoid the storage of gear where it would block navigation lights from view.

Read and understand the navigation light section of *Sport Boat Owner's Manual*.

Chapter 11: Electrical System

⚠ DANGER!

EXTREME FIRE, SHOCK & EXPLOSION HAZARD!

- **To minimize the risks of fire and explosion, *NEVER* install knife switches or other arcing devices in the fuel compartments.**
- ***NEVER* substitute automotive parts for marine parts. Electrical, ignition and fuel system parts were designed and manufactured to comply with rules and regulations that minimize risks of fire and explosion.**
- **Do *NOT* modify the electrical systems or relevant drawings.**
- **Have qualified personnel install batteries and/or perform electrical system maintenance.**
- **Make sure that *all* battery switches are turned *Off before* performing any work in the engine spaces.**

⚠ WARNING!

FIRE & EXPLOSION HAZARD!

- **Fuel fumes are heavier than air and *will* collect in the bilge areas where they can be accidently ignited.**
- **Visually and by smell (sniff test), check the engine and fuel compartments for fumes or accumulation of fuel.**
- ***ALWAYS* run the bilge blower(s) for at least four minutes prior to engine starting, electrical system maintenance or activation of electrical devices.**
- ***NEVER* expose the batteries to open flame or sparks, and *NEVER* smoke anywhere near the batteries.**

⚠ CAUTION

SHOCK & ELECTRICAL SYSTEM DAMAGE HAZARD!

When the engine is running, *NEVER* disconnect the battery cables. Doing so could cause damage to your boat's engine and/or electrical system.

NOTICE

Electrical connections are prone to corrosion. To reduce corrosion caused electrical problems, keep *all* electrical connections clean and apply a spray-on protectant that is designed to protect connections from corrosion.

12-Volt DC System

Battery

The battery supplies electricity for lights, accessories, and engine starting.

The Electrical section of Chapter 8, in the *Sport Boat Owner's Manual*, provides battery care and maintenance instructions.

Fuses

- Fuses for the engine and main accessory power are on the fuse block under the helm dash.
- Some equipment may have secondary fuse protection at the unit, or at the battery.

Alternator

The alternator will keep the battery properly charged when the engine is running at cruising speeds.

12-Volt DC Accessory Outlet(s)

⚠ CAUTION

Do *NOT* use the 12-volt DC accessory outlet with a cigarette or cigar lighter. High temperatures may melt the outlet.

- Your boat is equipped with one or more 12-volt DC accessory outlets.
- The outlet(s) can be used with any 12-volt device which draws 10 amps or less.
- Each 12-volt DC accessory outlet is protected by a 10 amp fuse on the main fuse block.

Electrical Routings

185, 195 & 205 Deck Electrical Harnesses

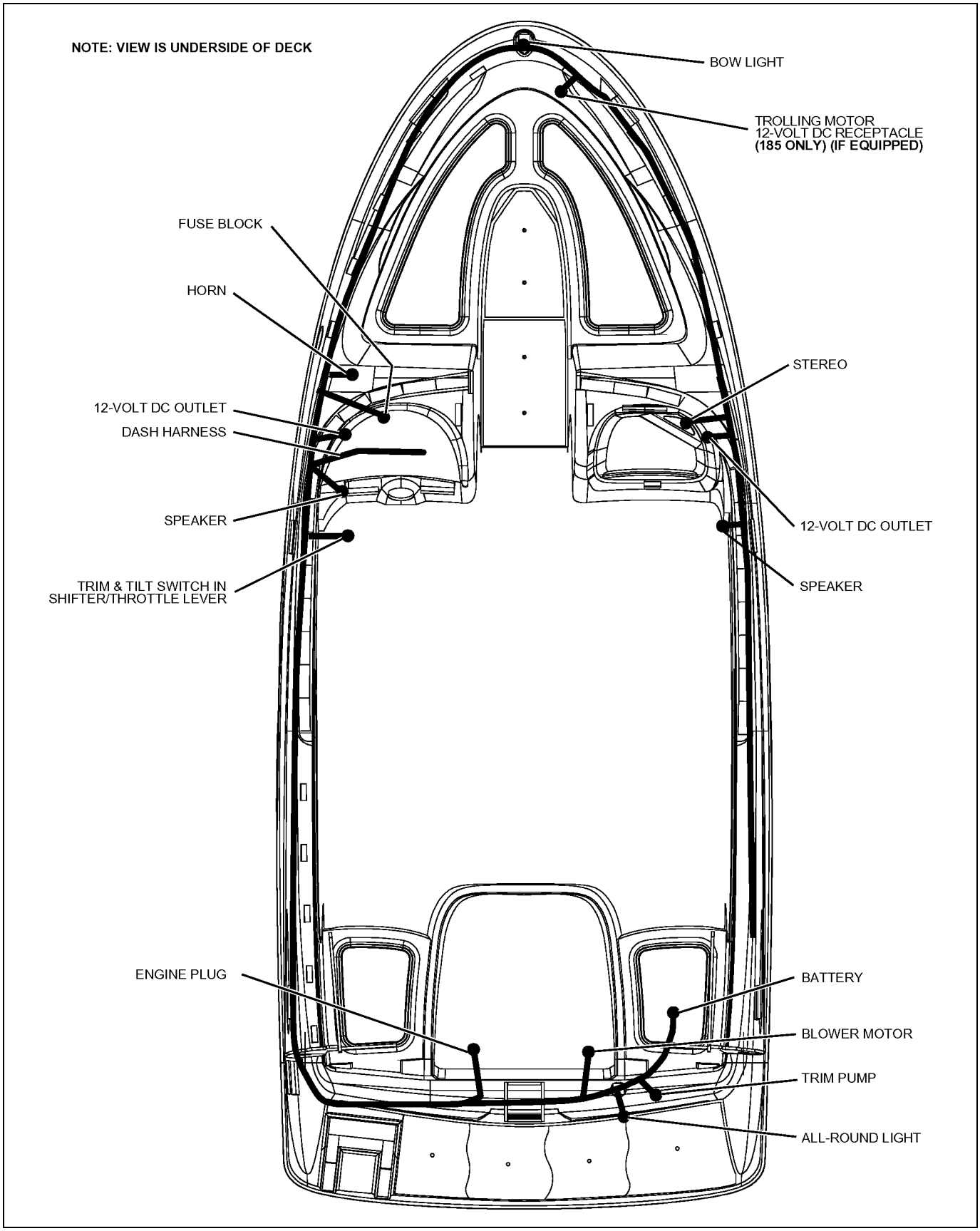

225 Deck Electrical Harnesses

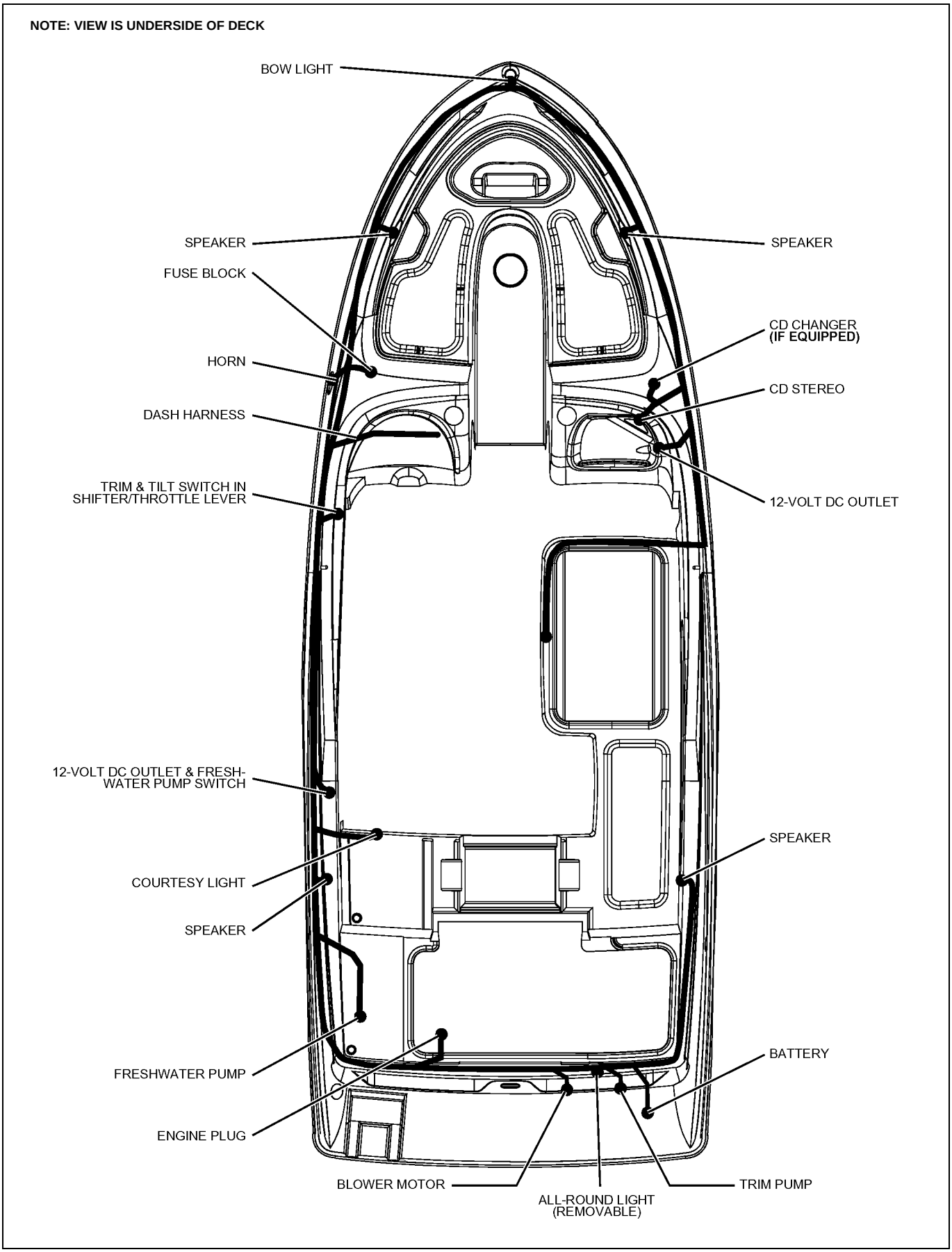

Hull Electrical Harness

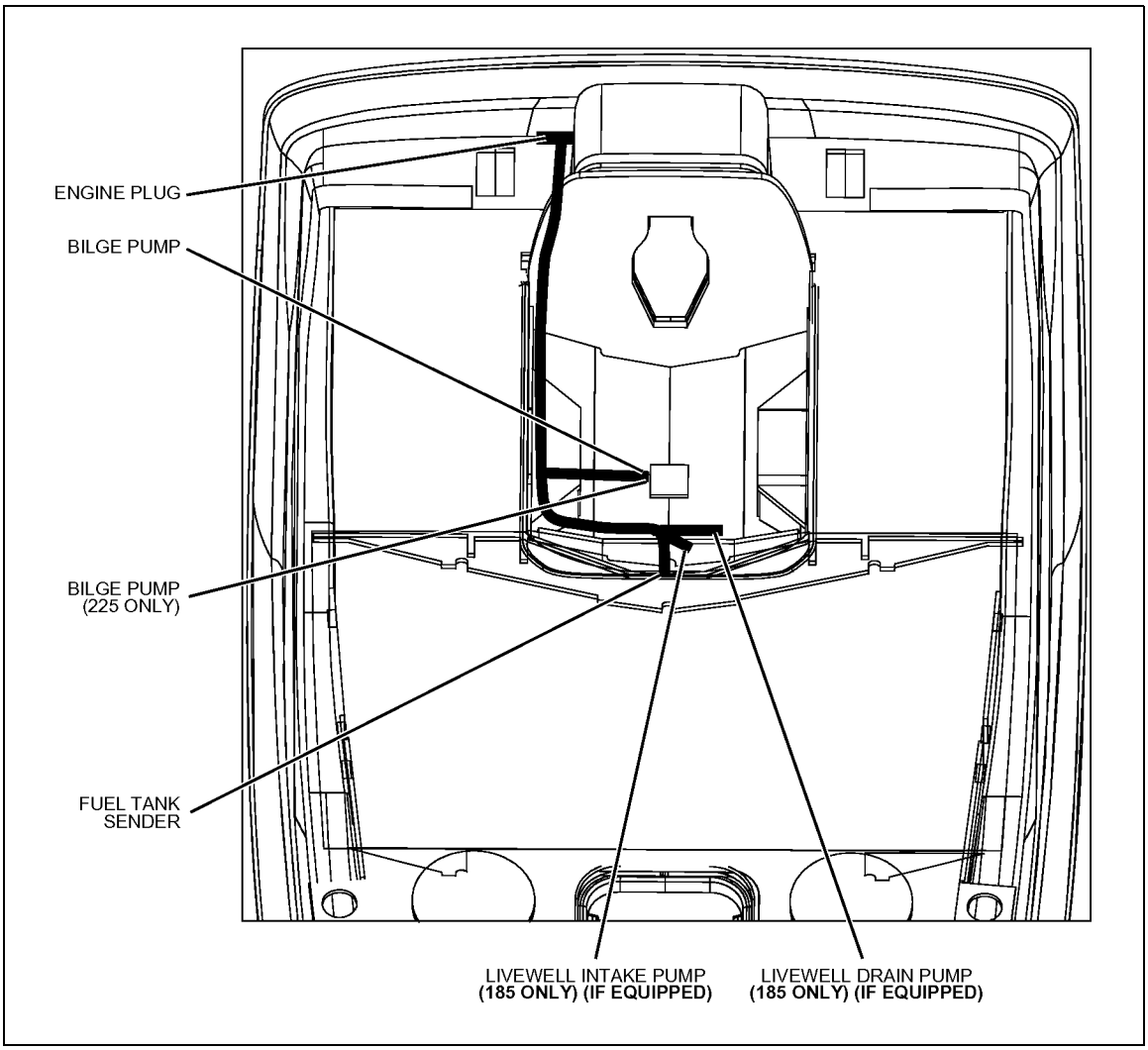

Wiring Diagrams

185, 195 & 205

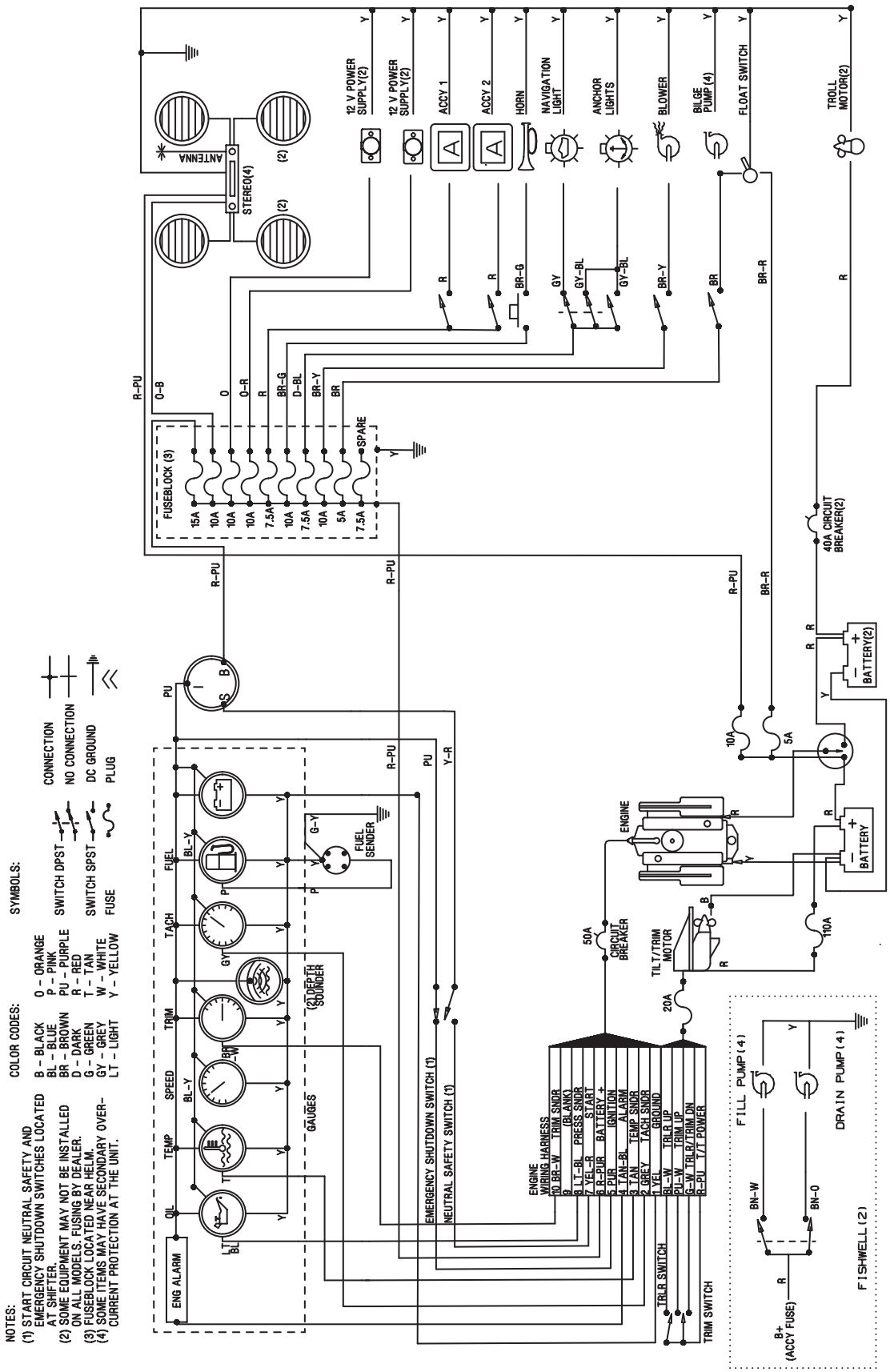

225

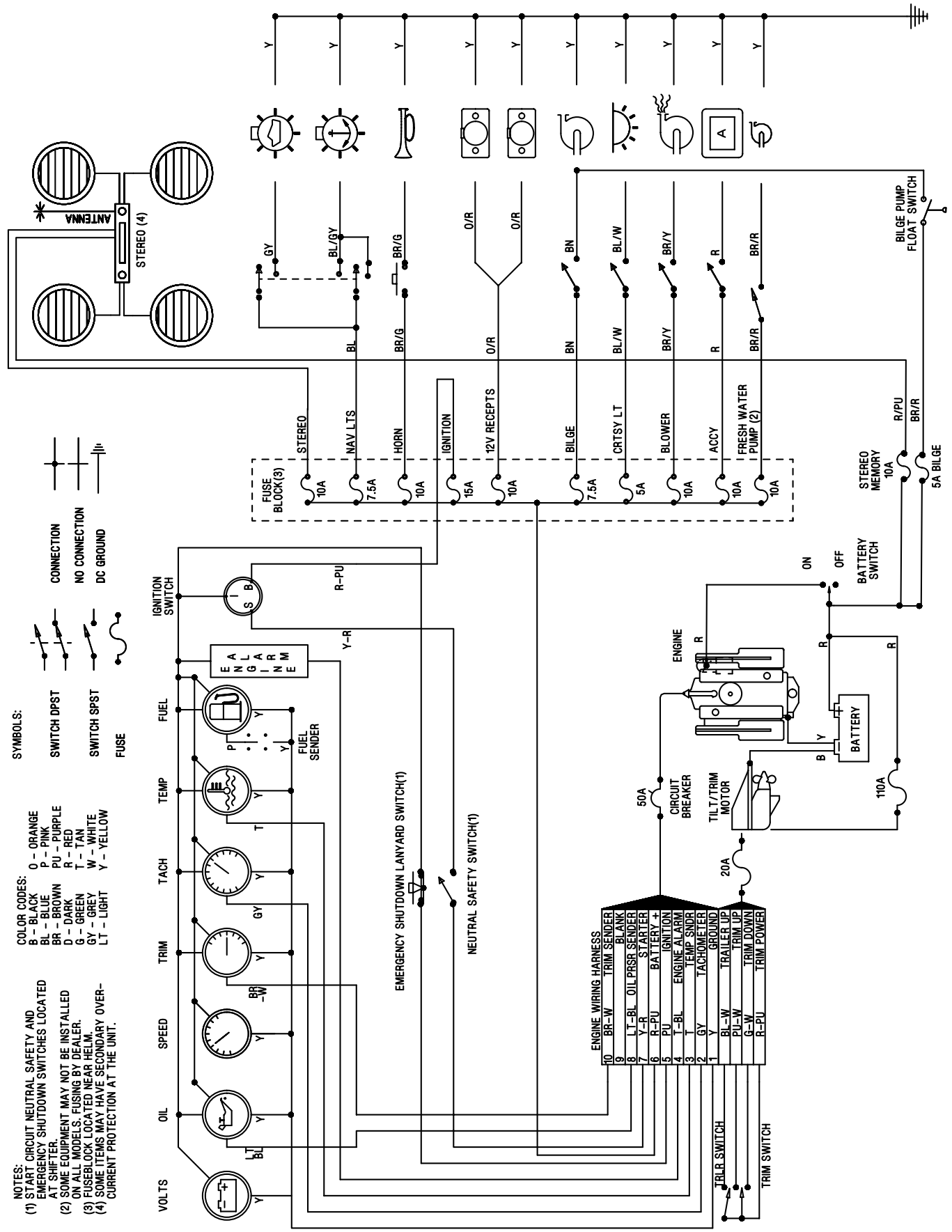
NOTES:
(1) START CIRCUIT NEUTRAL SAFETY AND EMERGENCY SHUTDOWN SWITCHES LOCATED AT SHIFTER.
(2) SOME EQUIPMENT MAY NOT BE INSTALLED ON ALL MODELS. FUSING BY DEALER.
(3) FUSEBLOCK LOCATED NEAR HELM.
(4) SOME ITEMS MAY HAVE SECONDARY OVER-CURRENT PROTECTION AT THE UNIT.
COLOR CODES:
B – BLACK
BL – BLUE
BR – BROWN
D – DARK
G – GREEN
GY – GREY
LT – LIGHT
O – ORANGE
P – PINK
PU – PURPLE
R – RED
T – TAN
W – WHITE
Y – YELLOW
SYMBOLS:
SWITCH DPST
SWITCH SPST
FUSE
CONNECTION
NO CONNECTION
DC GROUND
ANTENNA
STEREO (4)
FUSE BLOCK(3)
STEREO 10A
NAV LTS 7.5A
HORN 10A
IGNITION 15A
12V RECEPTS 10A
BILGE 7.5A
CRTSY LT 5A
BLOWER 10A
ACCY 10A
FRESH WATER PUMP (2) 10A
STEREO MEMORY 10A
5A BILGE
BILGE PUMP FLOAT SWITCH
BATTERY SWITCH
ON
OFF
IGNITION SWITCH
ENGINE
BATTERY
110A
50A CIRCUIT BREAKER
TILT/TRIM MOTOR
20A
FUEL SENDER
EMERGENCY SHUTDOWN LANYARD SWITCH(1)
NEUTRAL SAFETY SWITCH(1)
ENGINE WIRING HARNESS
10 BR–W TRIM SENDER
9 BLANK
8 LT–BL OIL PRSR SENDER
7 Y–R STARTER
6 R–PU BATTERY +
5 PU IGNITION
4 T–BL ENGINE ALARM
3 T TEMP SNDR
2 GY TACHOMETER
1 Y GROUND
BL–W TRAILER UP
PU–W TRIM UP
G–W TRIM DOWN
R–PU TRIM POWER
TRLR SWITCH
TRIM SWITCH
VOLTS
OIL
SPEED
TRIM
TACH
TEMP
FUEL
ENGINE

Important Records

Selling Dealer

Name Of Dealership

Address

Phone/FAX/E-mail

Sales Manager

Service Manager

Engine

Manufacturer | Model Name/Number

Engine Serial Number

Oil Type/SAE | Quarts per Engine | Filter Type

Propeller

Manufacturer | Pitch

Model Number

Key Numbers

Ignition | Other

Electronics

Manufacturer | Model Name/Number

Serial Number

Manufacturer | Model Name/Number

Serial Number

Manufacturer | Model Name/Number

Serial Number

Manufacturer | Model Name/Number

Serial Number

Float Plan

Before going boating, fill out a copy of this float plan (or similar) and leave it with a ***reliable*** person whom you can depend on to contact the Coast Guard or other rescue organization, if you do not return as scheduled.

Description of Boat

Registration/Documentation Number

Length | Make | Type

Hull Color | Trim Color

Fuel Capacity | Engine Type | Number of Engines

Distinguishing Features

Distinguishing Features

Operator of Boat

Full Name

Male or Female | Age | Health

Address

Address

Phone/FAX/E-mail

Operator's Experience

Persons on Board

Full Name

Age | Health | Phone Number

Full Name

Age | Health | Phone Number

Full Name

Age | Health | Phone Number

Full Name

Age | Health | Phone Number

Full Name

Age | Health | Phone Number

Full Name

Age | Health | Phone Number

Survival Equipment

Marine Radio (Yes/No)	Type	Frequencies
Number of PFDs	Flares (Yes/No)	Mirror (yes or no)
Smoke Signals (Yes/No)	Flashlight (Yes/No)	Food (Yes/No)
Water (Yes/No)	Anchor (Yes/No)	Raft/Dinghy (Yes/No)
Paddles (Yes/No)	EPIRB (Yes/No)	Other
Other	Other	Other

Vehicle Description

Make	Model
Color	License Number

Where is the Vehicle Parked?

Trip Expectations

Departing From

Departure Date	Departure Time

Stopover 1

Arrive No Later Than: Date	Arrive No Later Than: Time

Stopover 2

Arrive No Later Than: Date	Arrive No Later Than: Time

Stopover 3

Arrive No Later Than: Date	Arrive No Later Than: Time

Stopover 4

Arrive No Later Than: Date	Arrive No Later Than: Time

Stopover 5

Arrive No Later Than: Date	Arrive No Later Than: Time

Stopover 6

Arrive No Later Than: Date	Arrive No Later Than: Time

Final Destination Port (If Different Than Home Port)

Arrive No Later Than: Date	Arrive No Later Than: Time

If not returned by the date and time listed above, call the Coast Guard or other local authority.

Coast Guard Phone Number

Local Authority Phone Number

Owner’s Notes

Owner’s Notes

Part Number 1820285

Bayliner • P.O. Box 9029 • Everett, WA 98206 • 360-435-5571